WANG

CUSTOMER ENGINEERING

PRODUCT MAINTENANCE MANUAL

2236 MXE TERMINAL CONTROLLER

(EARLY FIELD SUPPORT)

NOTICE

"This document and the information it contains are the confidential property of, and are propietary to, Wang Laboratories, Inc. This document and the information it contains may not be made public without the written consent of Wang Laboratories, Inc. If for any reason this document is permitted by Wang to leave the physical custody of the company, it is returnable upon the demand of Wang Laboratories, Inc."

JULY 1982

REORDER NUMBER
729-1147

2236 MXE TERMINAL CONTROLLER BOARD

(EARLY FIELD SUPPORT)

2236 MXE TERMINAL CONTROLLER
TABLE OF CONTENTS

Section 1
Introduction

1.1 Scope
1.2 Description
1.3 Related Documentation
1.4 Model 2236 MXE Specifications

Section 2
Installation

2.1 Inspection
2.2 Interconnection
2.2.1 Baud Rate Switch Settings
2.2.2 Device Address Switch Settings
2.3 Installation of 2236 MXE Board
2.3.1 Wang Terminal To MXE Controller Interface
2.3.1.1 Direct Connection Cables
2.3.1.2 RS-232-C Compatible Modem Cables
2.4 Initial Turn-On
2.5 Loading the MXE Command Codes
2.5.1 Command Descriptions
2.5.2 Commands
2.5.2.1 'H' (HELP) All Command Codes
2.5.2.2 '?' Status
2.5.2.3 'A' Set Primary User
2.5.2.4 'B' Set Baud Rate
2.5.2.5 'C' Set Password
2.5.2.6 'D' Download Code
2.5.2.7 'J' Restart
2.5.2.8 'L' Lock
2.6 Voltage Checks

Section 3
Operation

3.1 Led Indications
3.2 Loading Software

Section 4
Theory of Operations

4.1 Overall System Block Diagram
4.2 Detailed System Function (to be supplied)
4.3 Chip Level (to be supplied)

TABLE OF CONTENTS
(continued)

Section 5
Maintenance

5.1 Introduction
5.2 Preventive Maintenance
5.3 Disassembly and Replacement
5.4 Troubleshooting
5.4.1 Power-Up Diagnostics For 2236 MXE Board
5.4.2 Troubleshooting Command Codes
5.4.2.1 'E' Analog Loop-Back
5.4.2.2 'F' Digital Loop-Back
5.4.2.3 'G' Print To All Screens
5.4.2.4 'I' Memory Test
5.4.3 Model WA3451 Modem Operation
5.4.3.1 Controls and Indicators
5.4.3.2 Table 5-1 Controls and Indicators
5.4.4 ITS-1 EIA Interface Test Set
5.4.4.1 EIA Interface Test Set Specifications
5.4.4.2 Funtional Description Digital Interface

Section 6
Bill of Materials

Section 7
Appendicies

A. Schematics
B. RS-232-C Loop Back Plug Wiring Diagram

2236 MXE

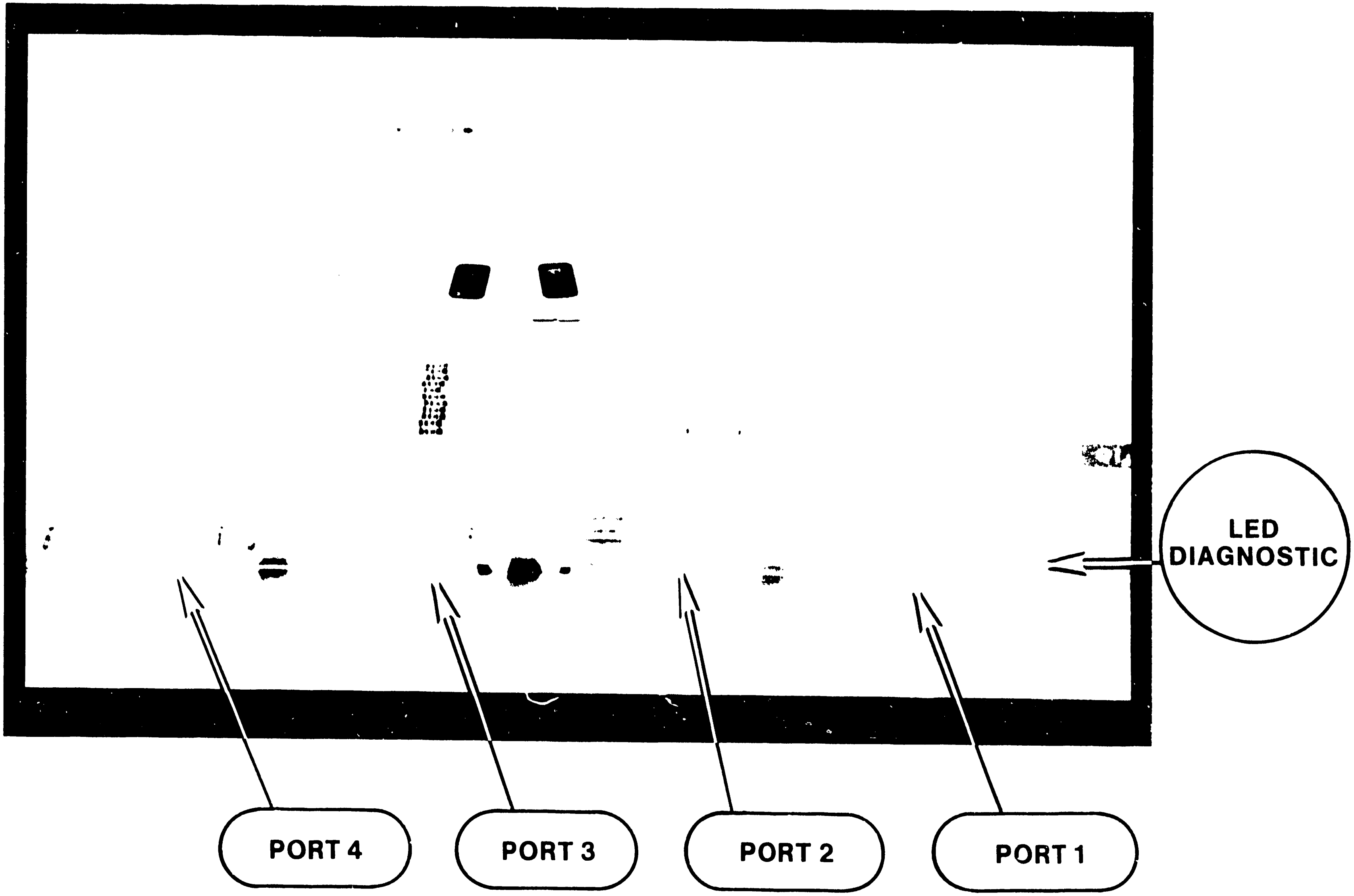
LED DIAGNOSTIC
PORT 4
PORT 3
PORT 2
PORT 1

Figure 1

SECTION

1

INTRODUCTION

SECTION 1

INTRODUCTION

1.1 SCOPE

This manual provides the Customer Engineer with information needed to install, operate, and troubleshoot the 2236 MXE Terminal Multiplexer.

1.2 DESCRIPTION

The Model 2236 MXE Terminal Controller is an intelligent Z-80 based terminal controller for 2200 MVP and 2200 LVP Central Processing Units (CPU's). This device controls I/O operations between the CPU and the terminals, and buffers data entered from or transferred to the terminal.

Each Model 2236 MXE supports four Model 2236D, 2236DE, 2236DW and 2336DW terminals concurrently, in any combination. The 2236 MXE performs may terminal control funtions normally executed by the CPU, thereby freeing the CPU for processing.

The Model 2236 MXE software is loaded into 48K of Random Access Memory(RAM) from a 2200 CPU. This allows the Model 2236 MXE to perform a variety of additional funtions, and provides a conveient mechanism for future device enhancements. The MXE also contains 8K of PROM for bootstrap and power up diagnostics.

Other features of the Model 2236 MXE include software and hardware slectable transmission rates, software selectable terminal ports, a time of day clock, and ability to alert the 2200 CPU when a local or remote terminal connects or disconnects. Additionally, the MXE can perform diagnostic tests, enabling it to test the board components, RAM parity, and local and remote modems.

The 2236 MXE Terminal Multiplexer is an enhanced controller for all asynchronous terminals attached to the 2200 MVP and LVP computers. It is downward compatible with the 2236 MXD Terminal Controller. The MXE is an enhanced version of the MXD in which four terminals or modems are multiplexed on the 2200 I/O bus.

A detailed list of new MXE enhancements are as follows:

a. Full modem support for each of four RS-232 Interface connectors.

b. An activity time out circuit for the RS-232 interface to support European modems through automatic disconnect.

c. "Time of Day" clock circuitry, (optional battery back-up).

d. The baud rate can be selected for each terminal by setting switches or software selectable.

e. A 4-Mhz, Z-80A Microprocessor based CPU.

f. RAM size up to 48K, permits downline loading of microcode and allows interface capabilities to non-Wang terminals.

g. An 8K on-board prom provides for bootstrap functions, power up diagnostics, and remote diagnostics capabilities.

h. All four channels have the control circuitry to perform a software controled local analog loopback, and the remote digital loopback test. This test will only work on Wang-(Vadic) WA3451 modems.

i..A software selectable local digital loopback capability at the DART chip for each port.

j. Motherboard and Daughterboard combination.

k. The capacity to set any terminal as the Primary User.

1.3 RELATED PUBLICATIONS

Refer to ______________________ for further details on Error Detection Codes and Detailed Fault Diagnostic tests.

1.4 SPECIFICATIONS

The following sections provide the specifications on the 2236 MXE Board.

a. Operating Environment
Same as the CPU

b. Power Requirments
Supplied by the CPU

c. I/O Slots Required
One (option up to three)

d. Wang Terminal Format
Communications Mode: Asynchronous, full-duplex
Character Format: 1 start bit, 1 stop bit, 8 data bits, 1 odd parity bit
Transmission Rate: 50, 110, 134.5, 300, 600, 1200, 2400, 4800, 9600, or 19,200 bps

e. Asynchronous Mode

Communications Mode: Asynchronous, full-duplex, half-duplex
Character Format: 1 start bit, 1, 1.5, 2 stop bit, 7 or 8 data bits, even or odd parity
Transmission Rate: 50, 110, 134.5, 300, 600, 1200, 2400, 4800, 9600, or 19,200 bps

* f.. MXE Motherboard (210-7874-A)

Dimension	11.54" length X 7.0" height

* g. MXE Daughterboard (210-7973-A)

Dimension	11.02" length X 6.3" height

h. New Faceplate (no Wang P/N)

Dimension	14.00" length X 1.18" height
RS-232 Ports	4
LED	1

i. Voltage Requirements on Mother/Daughter Boards

Mother (210-7874-A)	+5VR, +12V, -12V, ±0V
Daughter (210-7973-A)	+5VR, +12V, -12V, ±0V

* NOTE--When ordering the 2236 MXE board the mother and daughter boards are always attached, becoming the complete 2236 MXE board. You must order the entire board, the part number for the 2236 MXE is as follows:

Model 2236 MXE----Wang P/N 212-3032

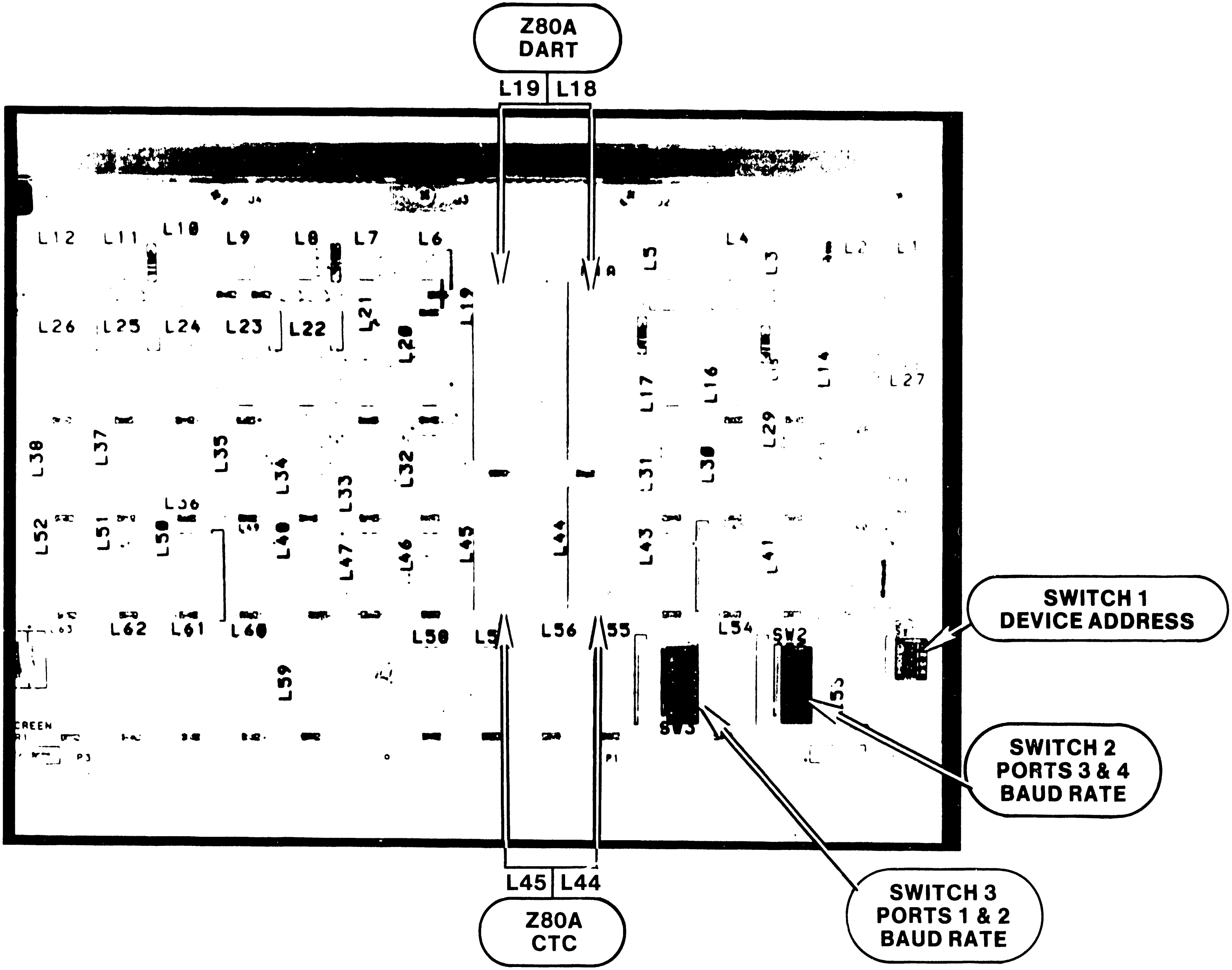
Z80A DART
L19
L18
L12
L11
L10
L9
L8
L7
L6
L5
L4
L3
L2
L1
L26
L25
L24
L23
L22
L21
L20
L19
L17
L16
L14
L27
L38
L37
L35
L34
L33
L32
L31
L30
L29
L36
L52
L51
L50
L49
L48
L47
L46
L45
L44
L43
L41
L63
L62
L61
L60
L58
L56
L55
L54
L59
L53
SW2
SW3
SCREEN
P3
P1
SWITCH 1 DEVICE ADDRESS
SWITCH 2 PORTS 3 & 4 BAUD RATE
SWITCH 3 PORTS 1 & 2 BAUD RATE
L45
L44
Z80A CTC

MXE MOTHER PCB 210-7874

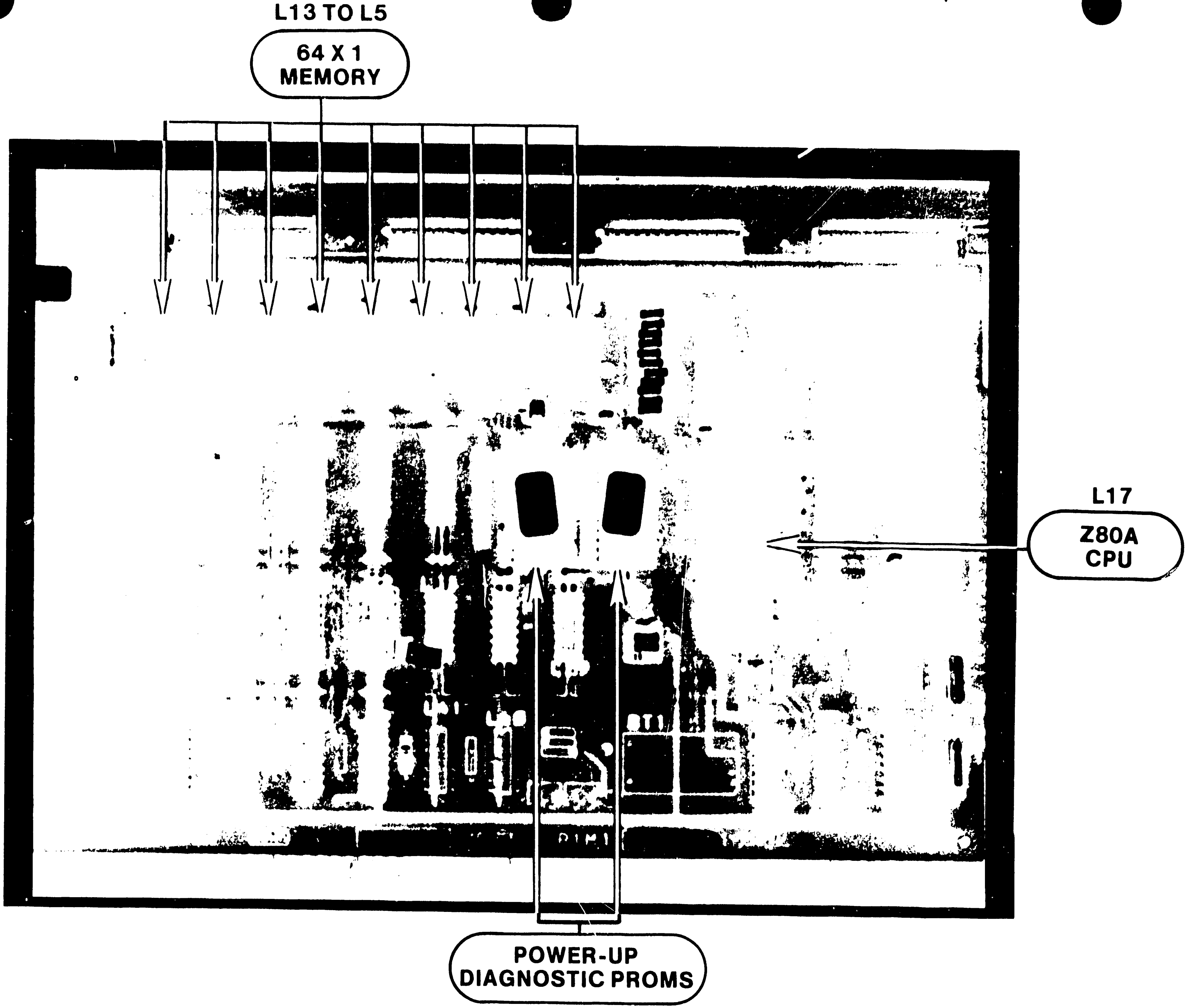
L13 TO L5
64 X 1
MEMORY
L17
Z80A
CPU
POWER-UP
DIAGNOSTIC PROMS

MXE DAUGHTER PCB 210-7973

SECTION

2

INSTALLATION

SECTION 2

INSTALLATION

2.1 INSPECTION

Before installing any MXE board inspect the board for any broken components and make sure all plugable chips are seated properly in their sockets. Check for bent pins on the plugable sockets.

2.2 INTERCONNECTION

There are three sets of switches connected to the Mother board (210-7874-A). Two switches are 8-bank type and one is a 4-bank type. The two 8-bank type switches are use to set the baud rate for each of the RS-232 Port connectors. The one 4-bank switch is used for setting the device type. Set the 8-bank switches to whatever baud rate desired. The following is a list of desired baud rate and device type settings:

2.2.1 BAUD RATE SWITCH SETTINGS

Refer to Figure 2-1.

2.2.2 DEVICE TYPE SETTING

Refer to Figure 2-2.

2236 MXE
HARDWARE SWITCH SETTINGS

BAUD RATE			SWITCH 3								SWITCH 2							
			PORT 1				PORT 2				PORT 3				PORT 4			
DEC	BAUD RATE	HEX	1	2	3	4	5	6	7	8	1	2	3	4	5	6	7	8
0	110	0	OFF	OFF	OFF	OFF	OFF	OFF	OFF	OFF	OFF	OFF	OFF	OFF	OFF	OFF	OFF	OFF
1	134.5	1	ON	OFF	OFF	OFF	ON	OFF	OFF	OFF	ON	OFF	OFF	OFF	ON	OFF	OFF	OFF
2	150	2	OFF	ON	OFF	OFF	OFF	ON	OFF	OFF	OFF	ON	OFF	OFF	OFF	ON	OFF	OFF
3	200	3	ON	ON	OFF	OFF	ON	ON	OFF	OFF	ON	ON	OFF	OFF	ON	ON	OFF	OFF
4	300	4	OFF	OFF	ON	OFF	OFF	OFF	ON	OFF	OFF	OFF	ON	OFF	OFF	OFF	ON	OFF
5	600	5	ON	OFF	ON	OFF	ON	OFF	ON	OFF	ON	OFF	ON	OFF	ON	OFF	ON	OFF
6	1200	6	OFF	ON	ON	OFF	OFF	ON	ON	OFF	OFF	ON	ON	OFF	OFF	ON	ON	OFF
7	UNDEFINED	7	ON	ON	ON	OFF	ON	ON	ON	OFF	ON	ON	ON	OFF	ON	ON	ON	OFF
8	2400	8	OFF	OFF	OFF	ON	OFF	OFF	OFF	ON	OFF	OFF	OFF	ON	OFF	OFF	OFF	ON
9	UNDEFINED	9	ON	OFF	OFF	ON	ON	OFF	OFF	ON	ON	OFF	OFF	ON	ON	OFF	OFF	ON
10	4800	A	OFF	ON	OFF	ON	OFF	ON	OFF	ON	OFF	ON	OFF	ON	OFF	ON	OFF	ON
11	UNDEFINED	B	ON	ON	OFF	ON	ON	ON	OFF	ON	ON	ON	OFF	ON	ON	ON	OFF	ON
12	9600	C	OFF	OFF	ON	ON	OFF	OFF	ON	ON	OFF	OFF	ON	ON	OFF	OFF	ON	ON
13	19,200	D	ON	OFF	ON	ON	ON	OFF	ON	ON	ON	OFF	ON	ON	ON	OFF	ON	ON
			LSD			MSD	LSD			MSD	LSD			MSD	LSD			MSD
BINARY			1	2	4	8	1	2	4	8	1	2	4	8	1	2	4	8

BAUD RATE SWITCH SETTINGS

		SWITCH BANK 1			
		MXE DEVICE ADDRESS SWITCH SETTING			
HEX	# OF MXE	SW-1	SW-2	SW-3	SW-4
00	1ST	OFF	OFF	OFF	OFF
40	2ND	ON	OFF	OFF	OFF
80	3RD	OFF	ON	OFF	OFF
				NOT USED	

DEVICE TYPE SWITCH SETTING

2.3 INSTALLING MXE BOARD

After inspecting and setting all switches correctly, the MXE board is ready to be installed. If you are upgrading from a MXD to a MXE the following steps are to be taken:

a. Turn power OFF on the system.

b. Remove all direct connect cables or RS-232 cable connectors from the MXD board.

c. Remove the MXD board.

d. Before inserting the MXE board make sure the device address and all baud rate settings are correct.

e. Insert the New MXE board in the same slot as the MXD.

f. Reconnect the RS-232 cable connectors to their respected port locations.

g. Make sure MXE board is seated properly and screw down all RS-232 connectors to ensure proper seating.

2.3.1 WANG TERMINAL TO MXE CONTROLLER INTERFACE

Each terminal can either be attached locally to the Model 2236 MXE Terminal Controller at distances ranging up to 2,000 feet or remotely . using modems and standard four-wire communications lines (RS-232-C). Communication between the terminal and the Model 2236 MXE Terminal Processor is asynchronous and full-duplex, with selectable line speeds ranging from 50 to 19,200 bits per second (bps). The four ports on the MXE are 25-pin, RS-232-C compatible.

A local cable connection between the Model 2236 MXE and a terminal is less than 25 feet. For cable distances from 25 feet to 2,000 feet, optional direct connection cable are available. For cable distances beyond 2,000 feet, two asychronous full-duplex, 11 bit, RS-232-C compatible modems per terminal must be used to provide the communication link over switched lines. One modem is connected to a port on the terminal processor; the other is connected to a terminal. The Wang Model WA3451 Asychronous/Synchronous Modem, which is compatible with Wang Model 2236D and DE terminals, is the recommended modem for switched remote connection of these terminal to 2200LVP or MVP systems.

Cable is optionally available for modem connections to Wang equipment in lengths of 12 feet, 25 feet and 50 feet. Two lenghts of modem cable for each terminal connection provide the necessary link between the terminal processor and its modem, and between the terminal and its modem.

2.3.1.1 Direct Connection Cables

Length	Part Number	Length	Part Number	Length	Part Number
25 feet	120-2236-25	500 feet	120-2236-5	1000 feet	12-2236-10
50 feet	120-2236-50	600 feet	120-2236-6	1250 feet	12-2236-11
100 feet	120-2236-1	700 feet	120-2236-7	1500 feet	12-2236-12
200 feet	120-2236-2	800 feet	120-2236-8	1750 feet	12-2236-13
300 feet	120-2236-3	900 feet	120-2236-9	2000 feet	12-2236-14
400 feet	120-2236-4				

2.3.1.2 RS-232-C Compatible Modem Cables

Length	Part Number
12 feet	220-0113
25 feet	220-0219
50 feet	220-0220

2.4 INITIAL TURN-ON

The MXE board is equiped with a power-up diagnostic. It checks the majority of the MXE Hardware prior to passing control to the firmware. The power-up diagnostic run time is approximately 6 seconds. The LED at the top of the MXE board indicates a GO or NO GO diagnostic condition.

On initial turn-on the LED will turn ON. If the Power-Diagnostic finds no fault in the hardware, then the LED will turn OFF in approximately 6 seconds. If the LED stays ON after 6 seconds, then there is a problem in the hardware of the MXE board. At this time you would refer to the troubleshooting section of this manual.

The LED turns off and varifies that the hardware test portion of the MXE has successfully been completed. The terminals connected to ports 1 through 4 of the MXE board should prompt like the following:

```
2236DE R01 19200BPS 8+0 (USA)
```

This prompt is called the self-identification message and consists of several fields separated by spaces. The followingt is a brief description of the self-identification message:

2236DE	is the model number, preceded by an asterisk.
R01	is the revision number of terminal firmware preceded by R.
19200BPS	is the data rate, followed by BPS.

8+O	is the number of data bits (7 or 8); E is even parity, O is odd parity, N is no parity.
(USA)	is the version of the keyboard and CRT character set, enclosed in parenthesis.

Type in 'RESET' once, the pompt should look like:

```
KEY SF'?
```

2.5 LOADING MXE COMMAND CODE

The Model 2236 MXE responds to certain user commands by entering a "Command Mode". By using this feature, the user can set both the transmission rate and which port is to perform as Terminal 1 on the system by means of the software alone, without manually resetting any switches. Command mode can be used to set a system password, to print a message on all terminals connected to the Model 2236 MXE, to test the memory in the RAM of the board, to restart the power on diagnostics, to lock the current transmission rate of the port issuing the command, and to list all possible commands. Command mode can also be used to test particular ports on the Model 2236 MXE. All command mode statements are password protected so that only a privileged user has access.

To enter the MXE command code press the "LOAD" key three times (do not type LOAD). After pressing LOAD three times the prompt on the screen will display "ENTER MXE COMMAND:" followed by a new line of "%". The user should then enter the desired MXE command. A description of the commands and how to enter the commands will follow. The MXE will process the command and prompt for another command until a blank line is entered thus putting the user back in the previous mode. The MXE command should not be entered until the MXE prompts for it.

Any terminal may enter MXE COMMAND MODE at ANY time. If the 2200 is printing to the screen during MXE command mode the 2200 output will be temporarily suspended to prevent the two outputs becoming intermixed!

2.5.1 COMMAND DESCRIPTIONS

In the command descriptions that follow, use these definitions:

The command 'psw' is a six character password containing no blanks, (the default is 'MXEPSW').

The command 'port designator' is a one character designator that is as follows:

0=The port at which the command is being typed (this is so that the user need not know which port s/he is connected to), and 1, 2, 3, 4 are the absolute MXE port addresses.

All commands begin with a ONE character command code. Most commands then have a six character password, which is the MXE password (similar in use to the 2200 system password) followed by any needed parameters in the order specified below. The user can always type help (while in MXE command mode) to obtain a list of command codes.

The command line is divided into different fields. The first field is a one character field, that states the program or command to be run. The second field is a six character field that contains the desired password for the MXE command.

NOTE--The password will not be printed on the screen. Instead, the MXE will print the numbers 0 through 5 as characters are typed so that the password can be protected. The third field is used for setting the desired command such as the 'port designator', 'baud rate', 'new password' and other commands. On initial turn-on the password default is 'MXEPSW'.

2.5.2 COMMANDS

This section covers the commands and step by step procedure for entering the proper commands. There are two command modes that are very important to aid the C.E. in setting up a 2236 MXE board.

The first important command mode is 'H' (HELP). This command allows you to see all the command code letters and definitions. Proceed with the following steps to enter the 'H' (HELP) command code:

2.5.2.1 'H' (HELP) ALL COMMAND CODES

Steps:

1. Type 'H'
2. Return

Example: %H

2.5.2.1 'H' continued

CRT DISPLAYS:
```
  A Set VP user
  B Set Baud Rate
  C Set psw
  D Download
* E Analog Loopback
* F Digital Loopback
* G Print
  H Help
* I Ram Test
  J Restart
  L Lock
  ? Status
```

* NOTE--Refer to Troubleshooting Section 5.4.1 for these 2236 MXE Command Codes.

The second important command code is '?' (Status). '?' shows the status of all ports on the 2236 MXE board. In detail it shows the following: 'ON' or 'OFF' line condition; 'Software Baud Rate' 'L'(Lock); '(Hardware Baud Rate)'; 'Local' or 'Remote'; 'Wang Terminal'. Proceed with the following steps to enter the ? (Status) command code:

2.5.2.2 '?' (STATUS)

Steps:

1. Type '?'
2. Return

Example: %?

CRT DISPLAYS:
```
2236 MXE RO  (BOOTSTRAP)
* PORT 1 ON  19200 L / (19200)  LOCAL   WANG TERMINAL
  PORT 2 OFF 19200   / (19200)  LOCAL   WANG TERMINAL
  PORT 3 OFF 19200   / (19200)  LOCAL   WANG TERMINAL
  PORT 4 OFF 19200   / (19200)  LOCAL   WANG TERMINAL
             SOFTWARE / (HARDWARE)
```

NOTE *-Indicates the Primary User.

2.5.2.3 'A' SET PRIMARY USER

Steps:

1. Type	'A'	
2. Password(psw), type	'MXEPSW'	(any 6 characters)
3. Port Designator, type	'X'	(ports 1 through 4)
4. Return		

Example: %AM012345

CRT DISPLAYS: OK

The port designated has become the new primary user in the MVP Mode.

2.5.2.4 'B' SET BAUD RATE

Steps:

1.	Type	'B'	
2.	Password(psw), Type	'MXEPSW'	(any 6 characters)
3.	Port Designator, Type	'X'	(ports 1 through 4)
4.	Baud Rate, Type	'1200'	(1200=example)

Example: `%BM0123451200`

CRT DISPLAYS:

```
2236 RO (BOOTSTRAP)
* PORT 1 ON  19200 L / (19200)  LOCAL  WANG TERMINAL
  PORT 2 OFF 19200   / (19200)  LOCAL  WANG TERMINAL
  PORT 3 OFF 19200   / (19200)  LOCAL  WANG TERMINAL
  PORT 4 OFF 19200   / (19200)  LOCAL  WANG TERMINAL
Are you SURE?(Y/N): Y     (answer Y or N)
OK
```

To assure that the new Baud Rate has been set properly, perform a '?' (STATUS) check. Refer to 2.5.2.2 '?' (STATUS).

NOTE: Setting the baud rate through software overrides any hardware switch setting. The baud rate desired is now set at the port designated.

2.5.2.5 'C' SET PASSWORD

Steps:

1.	Type	'C'	
2.	Password(psw), Type	'MXEPSW'	(any 6 characters)
3.	New Password(newpsw), type	'NEWPSW'	(any 6 characters)
4.	Return		

Example: `%C012345EWPSW`

CRT DISPLAYS:

```
C ///////////////////////////
OK
```

'NEWPSW' becomes the new password.

2.5.2.6 'D' DOWNLOAD CODE

NOTE: Format 'D' Download is not used at this time. Download will be used at a later date for future enhancements.

2.5.2.11 'J' RESTART

Steps:

1. Type	'J'
2. Password(psw), Type	'MXEPSW' (any 6 characters)
3. Return	

Example: %JM01234

CRT DISPLAYS: #

NOTE: The CRT will blank out after approximately five seconds. The LED on the MXE board will be lit for approximately six seconds during the 'RESTART' program.

This command restarts the MXE at its power-on diagnostics. This command can only be issued while in the bootstrap. The current state of MXE will be completely reinitialized! All baud rates which have been set through MXE command mode will be reset to their hardware defaults!!

2.5.2.12 'L' LOCK

Steps:

1. Type	'L'
2. Password(psw), Type	'MXEPSW' (any 6 characters)
3. Return	

Example: %LM01234

CRT DISPLAYS: BAUDRATE LOCKED

This command locks the current baud rate of the port issueing it. No port may change the baud rate of a port which is locked. This command is a toggle. Each time it is issued the state of the baud rate lock will be reversed.

To unlock the baud rate at the designated port, repeat steps 1 through 3 in the 'LOCK' command.

Example: %LM01234

CRT DISPLAYS: BAUDRATE UNLOCKED

NOTE: During many of the above commands the performance of the MXE will be impaired. Generally, this consists of all the ports slowing down somewhat. But in the case of analog and digital loop-back ALL port I/O will cease until the loop-back is completed. Therefor, it is absolutly imperative that all users connected to the MXE when loopback is to be performed be notified that the MXE will not be functioning smoothly.

2.6 VOLTAGE CHECKS

The MXE board voltages can be checked at the following location:

P1 Connector on the Daughter board (210-7973-A)

Voltages	Pin Location
+5VR	51/52
+12V	53/54
-12V	57/58
±0V	59/60

SECTION
3
OPERATION

SECTION 3

OPERATION

3.1 LED INDICATIONS

After 6-seconds of powering-up the LED located on the mounting bracket (see Figure _), will give two indications.

A. LED EXTINGUISHES (BOARD PASS)

The LED extinguishes 6-seconds after initial turn-on. This indicates that all of the MXE board Power-Up tests have passed.

B. LED REMAINS ON (CATASTROPHIC FAILURE)

When the LED remains on for more than approximately 6-seconds than that indicates a catastrophic failure. Perform diagnostic test or replace the MXE board.

3.2 LOADING SOFTWARE

In order for the 2236 MXE to operate a new revision level of the operating system Revision Level____________________ is needed for the 2236 MXE Operation.

SECTION 4

THEORY OF OPERATIONS

SECTION 4

THEORY OF OPERATION

To Be Supplied

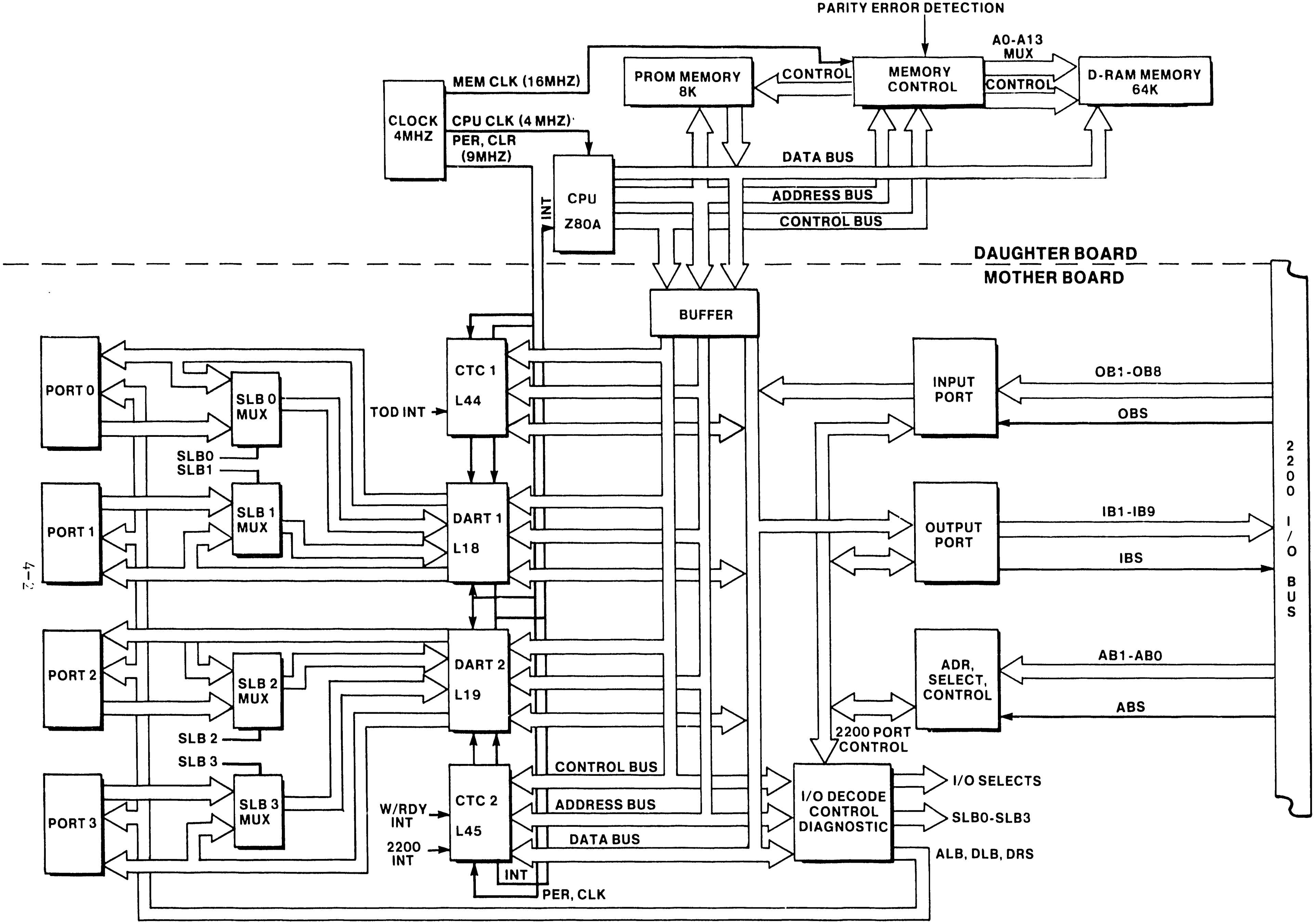
PARITY ERROR DETECTION
A0-A13 MUX
MEM CLK (16MHZ)
PROM MEMORY 8K
CONTROL
MEMORY CONTROL
CONTROL
D-RAM MEMORY 64K
CLOCK 4MHZ
CPU CLK (4 MHZ)
PER, CLR (9MHZ)
INT
CPU Z80A
DATA BUS
ADDRESS BUS
CONTROL BUS
DAUGHTER BOARD
MOTHER BOARD
BUFFER
PORT 0
SLB 0 MUX
SLB0
SLB1
TOD INT
CTC 1 L44
PORT 1
SLB 1 MUX
DART 1 L18
PORT 2
SLB 2 MUX
DART 2 L19
SLB 2
SLB 3
PORT 3
SLB 3 MUX
W/RDY INT
2200 INT
CTC 2 L45
INT
PER, CLK
CONTROL BUS
ADDRESS BUS
DATA BUS
INPUT PORT
OB1-OB8
OBS
OUTPUT PORT
IB1-IB9
IBS
ADR, SELECT, CONTROL
AB1-AB0
ABS
2200 PORT CONTROL
I/O DECODE CONTROL DIAGNOSTIC
I/O SELECTS
SLB0-SLB3
ALB, DLB, DRS
2200 I/O BUS

Figure 4-1 SYSTEM BLOCK DIAGRAM

SECTION
5
MAINTENANCE

SECTION 5

MAINTENANCE

5.1 INTRODUCTION

This section describes the proper procedure for maintaining and testing the 2236 MXE Board

5.2 PREVENTIVE MAINTENANCE

The 2236 MXE has no voltage adjustments and is dependent on the voltages supplied by the CPU. Preventive Maintenance on the MXE should be performed at the same time as the CPU.

5.3 DISASSEMBLY AND REPLACEMENT

Disassembly and Replacement of the 2236 MXE Board should be in the following manner:

a. Power down the entire system.

b. Remove all cables connected to the 2236 MXE board.(Make a note on the position of each cable being removed and what port they are connected to.)

c. There are three banks of switches on the 2236 MXE board. Before replacing the board, be sure to match the switch settings of the OLD MXE board to the NEW MXE board. If not sure of the switch settings then refer to the Baud Rate Switch Setting Table or the Device Address Switch Setting Table.

d. After varifing that all switches are set correctly, then insert the new 2236 MXE board in the same slot as the old MXE board.

e. Replace all cables to their original positions. Make sure all cable connectors are secure by screwing down the connector screws.

f. Power-On the 2200 system and watch the LED on top of the 2236 MXE board. The LED should stay eluminated for approximately six seconds and go OFF. If LED turns OFF then the MXE power-on diagnostics are successfull. If LED stays ON then the power-on diagnostics have failed. The MXE board is D.O.A., replace it and refer to steps a. through f.

g. Load the NEW Revision Level Operating System Diskette.

5.4 TROUBLESHOOTING

This section covers some troubleshooting procedures to verify or correct most problems on the Model 2236 MXE Terminal Controller.

5.4.1 POWER-UP DIAGNOSTICS FOR 2236 MXE

The MXE board is equiped with a power-up diagnostic. It checks the majority of the MXE hardware prior to passing control to the firmware. The power-up diagnostic run time is approximately 6 seconds. The LED at the top of the MXE board indicates a GO or NO GO diagnostic condition.

On initial turn-on the LED will turn ON. If the power-on diagnostic circuitry finds no fault in the hardware, then the LED will turn OFF in approximately 6 seconds. If the LED stays ON after 6 seconds, then there is a problem in the hardware of the MXE board.

There are two states in which the 2236 MXE operates.

1. LED turns <u>OFF</u> approximately 6 seconds after initial turn-on. This indicates a normal operation.
2. LED remains <u>ON</u> after 6 seconds indicates a catastrophic board failure.
   <u>Corrective action:</u> Replace the 2236 MXE board.

The LED turns off and varifies that the hardware test portion of the MXE has successfully been completed. All terminals connected to the MXE board should prompt like the following:

```
2236DE R01 19200BPS 8+0 (USA)
```

Type in 'Reset' once, the prompt should look like:

```
KEY SF'?
```

Depress 'LOAD' key 3 times, the prompt should look like:

```
Enter MXE Command:
%
```

At this time the C.E. can enter in the desired Command Codes.

5.4.2 TROUBLESHOOTING COMMAND CODES

The following Command Codes will aid the C.E. in troubleshooting typical problems related to the 2236 MXE Terminal Controller. The 2236 MXE is designed to perform ALB and DLB test directly from the Terminal. It is not necessary to perform any switch settings on the WA3451 Modem. The Front Panel and Rear Panel switches of the WA3451 Modem should be set like the following:

WA3451 MODEM SWITCH SETTINGS

Switches	Position
DLB/OFF/ALB	OFF(Normal Operation)
OFF/ST	OFF(Normal Operation)
ANS	FORCE ANSWER
DATA/AANS/OFFL	AUTO ANSWER
HIGH/LOW	HIGH/LOW

5.4.2.1 'E' ANALOG LOOP-BACK

Steps:

1.	Type	'E'	
2.	Password(psw), Type	'MXEPSW'	(any 6 charaters)
3.	Port Designator, type	'X'	(ports 1 through 4)
4.	Return		

Example: %EM012345

CRT DISPLAYS: ANALOG LOOPBACK SUCCESS
or
ANALOG LOOPBACK ERROR

The Analog Loopback Test takes approximately 6 seconds to run. This test answers in two states, SUCCESS or ERROR(failure). The Analog Test checks the local end of the communications link. This isolates the modem from the telephone line and connects the transmitter output to the receiver input. The Modem must be on hook to perform the ALB test. The test will perform Analog Loopback in the 11 bit mode using a 256 byte data pattern testing Wang WA3451 Modem, MXE Circuitry, the specific port circuitry in which the ALB test was designated to test. This command will cause all I/O's at all ports to be temporarily suspended!

NOTE:--The Digital and Analog Loopback test could be utilized to test only the designated MXE port by inserting the RS-232 loop-back plug.
RS-232 Loopback Plug part number (WLI# 420-1040)

5.4.2.2 'F' DIGITAL LOOP-BACK

Steps:

1. Type,	'F'	
2. Password(psw), Type	'MXEPSW'	(any 6 characters)
3. Port Designator, Type	'X'	(ports 1 through 4)
4. Return		

Example: %F0123451

CRT DISPLAYS: DIGITAL LOOPBACK SUCCESS
or
DIGITAL LOOPBACK ERROR

Digital loopback is executed at the port designated. The digital loopback checks out the information transfered from one modem to another. While checking out the transfered information which consist of 256 byte data pattern. The DLB test checks the MXE, the local Modem, the Remote Modem, and the TeleCo line. If the DLB test is successful, a 256 byte bit pattern will be displayed on the Remote Terminal (2236DE). Also, a "Digital Loopback Success Message" will be displayed on the 2236DE terminal that initiated the test. If any malfunction occurs during the digital loopback test the prompt will be 'DIGITAL LOOPBACK ERROR'. This test takes approximately eight seconds. During this command all I/O at all ports will be temperarily susspended.

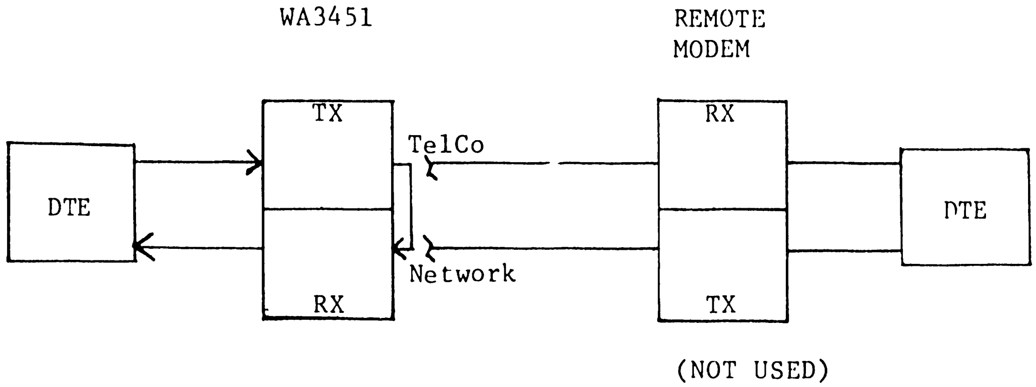
WA3451
REMOTE MODEM
TX
RX
TelCo
Network
DTE
RX
TX
DTE
(NOT USED)

5-1 ALB Test Diagram

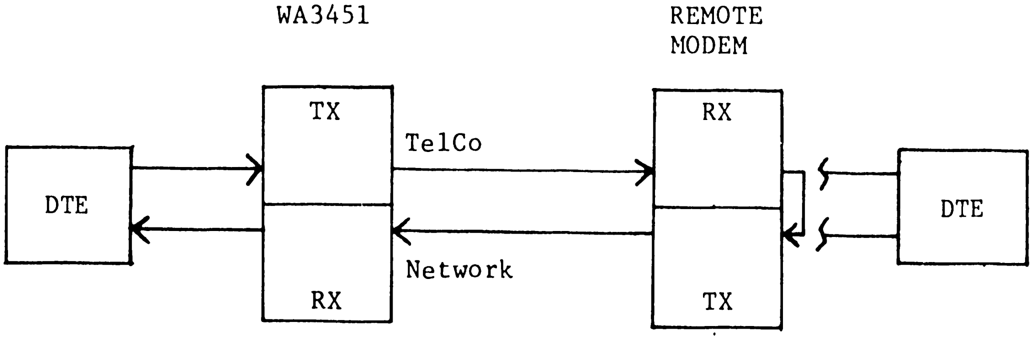
WA3451
REMOTE MODEM
TX
RX
TelCo
Network
DTE
RX
TX
DTE

5-1 DLB Test Diagram

5.4.2.3 'G' PRINT TO ALL SCREENS

Steps:

1.	Type	'G'
2.	Password(psw), Type	'MXEPSW' (any 6 characters)
3.	Message, Type	'message' (up to 80 characters)
4.	Return	

Example: %GM012345 THE QUICK BROWN FOX JUMPED OVER THE LAZY DOG.

CRT DISPLAYS: THE QUICK BROWN FOX JUMPED OVER THE LAZY DOG.

The 'message' will be printed on all terminals connected to the MXE. The 'message' must not run over the 80 byte limit of the command. Also, the 'message' will be inserted in the output stream of all terminals regardless of their state and a 3 second pause will be excuted to allow all users to read the message.

5.4.2.4 'I' MEMORY TEST

Steps:

1.	Type	'I'
2.	Password(psw), Type	'MXEPSW' (any 6 characters)
3.	Return	

Example: %IM01234

CRT DISPLAYS: NO MEMORY ERROR
or
MEMORY ERROR

Memory Test command is used to test the RAM in a nondestructive way. There are two prompts to answer the memory test. 'NO MEMORY ERROR' indicates no catastrophic failure. 'MEMORY ERROR' indicates a catastrophic error. This test divides the RAM into three 16K increments for the purpose of being able to store and display errors should one or two of the three increments contain errors. Port activities will slow down during memory test but, there will be no destructive damage to the memory.

NOTE: If errors are detected and displayed on the 2236DE terminals refer to Documentation release 9220.

5.4.3 MODEL WA3451 MODEM OPERATION

5.4.3.1 CONTROL AND INDICATORS

Figure 5-3 (a.)+(b.) shows the location of the controls and indicators. Table 5-1 contains a listing of the controls and indicators and their funtions.

a.) Front View

b.) Rear View

Figure 5-3
CONTROLS AND INDICATORS

5.4.3 MODEL WA3451 MODEM OPERATION

5.4.3.1 CONTROL AND INDICATORS

Figure 5-3 (a.)+(b.) shows the location of the controls and indicators. Table 5-1 contains a listing of the controls and indicators and their funtions.

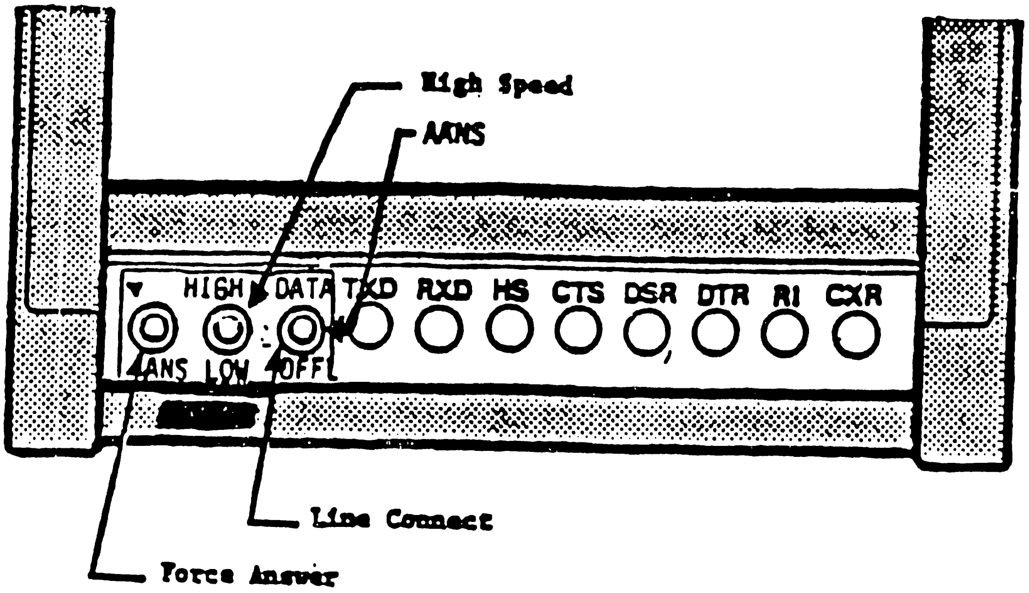
High Speed
AANS
HIGH
DATA
TXD
RXD
HS
CTS
DSR
DTR
RI
CXR
ANS
LOW
OFF
Line Connect
Force Answer

a.) Front View

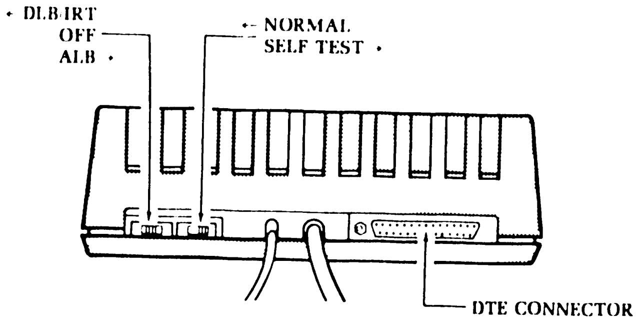
DLB/RT
OFF
ALB
NORMAL
SELF TEST
DTE CONNECTOR

b.) Rear View

Figure 5-3
CONTROLS AND INDICATORS

5.4.3.2 TABLE 5-1 CONTROLS AND INDICATORS

Controls/Indicators	Function
REAR PANEL	
DLB/OFF/ALB	When this switch is positioned to DLB, the modem will go into a Digital Loop Back mode. This switch, when set to the ALB position, will cause the modem to go into an Analog Loop Back mode and will busy out the TelCo line.
NORMAL/SELF TEST	This switch, when set to the ST position, will cause the modem to go into self test mode and overrides the DTR circuit, forcing it to ON condition.
FRONT PANEL	
ANS(Force Answer)	This switch is used manually answering a call. After answering the call, and when in Off-Line (OFFL) or Auto Answer (AANS) switch position, the attendant activates the momentary ANS switch to allow the modem to enter a normal answer tone routine by turning ON the RI circuit.
HIGH/LOW (Speed)	This switch set to High Speed position, will cause the modem to go into High Speed data mode. When the switch is in the Low Position, the modem will go into Low Speed data mode. This switch is only operative in the originate mode.
DATA/AANS/OFFL	For use with a standard telephone. In the Off-Line (OFFLO position, the modem will not answer the line automatically, while in the Auto Answer (AANS) position, the modem will answer the line automatically. In the Data position, the modem will sieze the line and will not disconnect until the switch is returned to the OFFL or AANS position.
LED Indications	
TXD	Transmit Data--This lamp is lit when spacing data is being transmitted from the local DTE to a remote modem.
RXD	Receive Data--This lamp is lit when spacing data is being received at the local DTE from a remote modem.

LED(continued)

HS	High Speed--This lamp is lit when the modem is in the (3400/212 mode and off when the incoming data is in 103 mode.
CTS	Clear to Send--When ON, this lamp indicates that the modem is ready to accept data from the DTE.
DSR	Data Set Ready--When On, this lamp indicates that the modem is connected to the TelCo line. This lamp will flash when the modem is in a test mode.
DTR	Data Terminal Ready--When ON, this lamp indicates that the DTE is ready, connected to the modem.
RI	Ring Indicator--When ON, this lamp indicates that the modem is receiving a ring signal from the TelCo line. This lamp will also flash twice per second whenever the modem fails the idle test or self-test.

5.4.4 ITS-1 EIA INTERFACE TEST SET

The model ITS-1 EIA Interface Test Set is a self-contained pocket size test set that can be inserted between the Data Communication Equipment (DCE) or modem and Data Terminal Equipment (DTE). It permits the user to monitor the EIA RS-232 signals and isolate and identify sources of trouble.

The EIA Interface Test Set contains nine indicators which continuously monitor the level of the following interface signals: transmitted data, received data, request-to-send, clear-to-send, data-set-ready, received-carrier-detect, data-terminal-ready, signal-quality-detect and ring indicator. Two indicators monitor the transmit and receive clock signals. Unlike the nine level indicators, the two indicators will not respond when only a dc level is present. The clock interface signal indicators will only turn on when there is an active clock signal present. Two additional uncommitted indicators are available for monitoring either positive or negative levels on any of the interface lines.

The Interface Test Set contains 24 switches which allow any of the interface signals except line one, (Frame Ground) to be interrupted. These switches are physically located in the center of the front panel and functionally divide the Test Set into two halves. The upper half contains a cable and connector for connecting the Test set to the DCE (data communications equipment) or modem. The indicators which monitor signals originating from the modem are also located on the upper half of the front panel. Likewise, the lower half of the Test Set contains a connector to which the DTE (Terminal or CPU) can be connected. The indicators which monitor signals originating from the DTE are also located on the lower half of the test set Furthermore, the positive and negative test indicators are also located on the lower half of the Test Set. All indicators are labeled with both the standard EIA designation and the commonly used abbreviations.

Twenty five pins are located both above and below the switches. These pins permit monitoring of any of the interface lines with either or both the positive and negative test indicators with jumpers supplied or probing with an external meter or oscilloscope. Both sets of pins are arranged in the same configuration and order as the pins in a standard EIA RS-232 female connector.

The Interface Test Set is housed in a sturdy plastic case with aluminum extrusions and hinge. A positive latch is provided on the cover to keep the Test Set closed securely when not in use. The front panel is photographically etched and overcoated to prevent the lettering from being scratched or marred during use. The Test Set is self-contained and is powered by two penlite batteries which will provide over 100 hours of continuous operation. No power is consumed by the Test Set when not in use.

5.4.4.1 EIA INTERFACE TEST SET SPECIFICATIONS

LEVEL INDICATORS
Transmitted Data
Received Data
Request-to-Send
Clear-to-Send
Data-Set-Ready
Received-Carrier-Detect
Data-Terminal-Ready
Signal-Quality-Detect
Ring Indicator
Positive Test
Negative Test

ACTIVITY INDICATORS ....Transmit Clock
Receive Clock

INDICATOR THRESHOLD ....± 3 volts

INDICATOR INPUT IMPENDANCE.....30,000 ohms

POWER ....Two 1.5 volts
AA Batteries

DIMENSIONS ....4.5"L x 3.6"W
1.6"H

WEIGHT ....12 oz.

5.4.4.2 Functional Description Digital Interface

Pin

1 Chassis Ground
This is protective ground, tied to the AC power ground and is isolated from the signal ground (Pin 7; SG) unleto Send (CTS) (from Modem)

2 Transmitted Data (TXD) (to Modem)
Signals on this circuit are generated by th Data Terminal Equipment and transferred to the modem for transmission to the Remote Data Terminal equipment. The modem should not transmit data on this circuit unless an ON condition is present on the CTS circuit. This circuit is held to the "MARK" state by the modem whenever the CTS circuit if OFF.

3 Received Data (RXD) (from Modem)
Signals on this circuit are generated by the modem receiver in response to signals transmitted by tne remote modem except when the modem is in analog loopback test mode. This circuit is clamped to "MARK" whenever the CXR circuit if OFF. When the modem is operated in the 1200 bps character (asynchronous format), the clock signals SCT and SCR are clamped to "MARK" on the interface.

4 Request to Send (RTS) (to Modem)
Data terminal presents ON signal (+3v to +25v) to this circuit when data terminal intends to transmit data. After turning this signal ON, data terminal must wait for ON condition of Clear-To-Send (pin 5) circuit before starting data transmission.

5 Clear to Send (CTS) (from Modem)
An ON condition of the CTS circuit indicates to the terminal equipment that the modem will transmit any data which is present on the TXD circuit. If CTS is OFF, the modem will internally clamp TXD to MARK and ignore the customer transmit data circuit. The CTS circuit is always turned OFF when the modem is in the digital loop mode (locally or remotely activated). The CTS circuit will turn OFF whenever circuit CXR is OFF. CTS is also strapped optionally to follow RTS.

6 Data Set Ready (DSR) (from Modem)
This signal from the modem indicates that the modem is powered ON and connected to the telephone line (OFF-HOOK) or not in a test mode and DSR control option enabled or no Switch Hook (SH) indication and the unattended disconnect option is enabled. The ON condition of the DSR circuit indicates that the modem is in the data mode and is capableof transmitting and receiving data signals. The ON condition of both DSR and CTS is required when transmitting data.

7 Signal Ground (SG)
Common ground reference point for all interface circuits except protective ground (Pin 1; FG).

8 Carrier Detect (CXR) (from Modem)
Informs DTE that the modem is receiving a data signal suitable for demodulation. Mode selection is based on the type of MARK carrier detected. It also initiates the Clear To Send Delay.

9 +12V and -12V
10 These signals provide test points to verity the presence of power in the mode. This is supplied through 1k ohm resistors and is not intended as a source of power for peripheral equipment.

11 No Connection

12 Speed Mode Indication (CI) (from Modem)
Circuit will be in the ON (positive voltage) state when the modem is in the high speed data mode and OFF (negative voltage) state in the low speed data mode.

13 No Connection

14 No Connection

15 Serial Tranmsmit Clock (SCT) (from Modem)
This interface circuit is associated with the high speed synchronous format when the transmit timing is set for internal timing. The SCT signal is used to provide the DTE with signal element of the transmitted data (TXD) circuit.

16 No Connection

PIN

17 Serial Receiver Clock (SCR) (from Modem)
This interface circuit is associated with the synchronous format in the high speed mode. The square wave signal on the circuit at the nominal 1200 Hz rate is used to provide the DTE with receiver timing information for the RXD Circuit. The ON to OFF (negative-going) transition on circuit SCR indicates the center of each signal element on the RXD circuit.

18 Analog Loop/Delayed Busy Out (CN) (to Modem)
The make busy lead is used to make the data set busy and/or in conjunction with the DTR lead to go into the analog loop mode. If CN is ON and DTR is OFF, the data set will be made busy. If DTR and CN are both ON, the data set will go into the analog loop mode as well as make busy. An OPEN circuit on CN will be interpreted as a mark. The CN function is available on Pin 18 of the customer interface when the TM function is optioned for Pin 25. The CN function may be optioned on Pin 25.

19 No Connection

20 Data Terminal Ready (DTR) (to Modem)
Control signal used to prepare modem for connection to the communications channel and maintain the connection once established. In automatic answering applications, the modem will connect to the line upon receipt of the trailing edge of the ringing signal if DTR is ON. DTR may be forced on internally regardless of interface voltage, with switch option. DTR must be turned ON in order for the modem to automatically answer an incoming call.

21 Remote Test Control (RTC)
This circuit is used optionally to initiate a remote digital loop test from the local modem. An ON (positive) condition of this circuit will cause the remote modem to enter the digital loop mode if all the necessary conditions have been establilshed. The rear panel DLB/OFF/ALB switch can also be used to initiate the loopback test.

22 Ring Indicator (RD) (from Modem)
The ON condition of this circuit indicates that a ringing signal is being received by the modem. When the telephone line is OFF-HOOK, or whern ringing stops, the RI circuit will turn OFF.

23 Data Rate Select (to Modem)
This interface circuit is used on an optional basis to establish the speed mode of a data call at the originating modem. Speed control at Pin 23 can be accomplished by the DTE, when the speed mode switch is set to low. An open circuit on Pin 23 will be interpreted as a mark.

24 External Serial Transmit Clock (SCTE) (to Modem)
Signals on this circuit are used to provide the modem transmitter with signal element timing information when the transmitter timing external strap option is selected and the high speed mode when synchronous format is used. The ON to OFF transition of this circuit should nominally indicate the center of each signal element on the TXD circuit.

25 Test Mode (TM)
This circuit is ON (positive) when the modem is in a test mode (either locally or remotely controlled) and is OFF (negative) when the modem is in any other mode. The TM circuit turns ON immediately by activating the DLB/OFF/ALB switch in the rear panel. The CN function is available on Pin 18 of the customer interface when the TM function is optioned for Pin 25.

SECTION
6
BILL OF MATERIALS

SECTION 6

BILL OF MATERIALS

```
MA0085       SINGLE-LEVEL   BILL   OF   MA   RIAL AS OF                         RUN DATE- 12/19/81          PAGE    1

ASSEMBLY PART NUMBER  209-7874-  - -       *** PHANTOM ***  LEGEND
ASSEMBLY DESCRIPTION  PCA MXE IC CONTROLLER MOTHER BD      1- P-PHANTOM- 2- ITEM MASTER DELV CODE- 3- *-TAGGED OUT OF KIT-PROD STR-

 POSITION  IN  LEGEND   COMPONENT              DESCRIPTION                      E C N    QUANTITY   U/M  E/I
  STRUCTURE     1  2 3   PART .NUMBER                                                     PER ASSY

1                   IN    300-1903-   - -   CAP .01 UF +80-20% 25 V CERAMIC D     PATREL     3.0000  EACH
1                   FS    300-1966-   - -   CAP .047 UF 50V+80-20% CERAMIC MLD    PATREL    52.0000  EACH
1                   FS    300-4022-   - -   CAP  15.0  UF 20 V 10% TANT AXIAL     PATREL 61  4.0000  EACH 00001
1                   IN    300-4060-   - -   CAP .22 UF  10% 20V TANT              211520     1.0000  EACH
1                   IN    300-4065-   - -   CAP 10  UF  10% 20V TANT              PATREL     1.0000  EACH
1                   IN    325-1503-   - -   SWITCH SLIDE SPST 8 POS DIL           PATREL     2.0000  EACH
1                   IN    325-1504-   - -   SWITCH SLIDE SPST 4 POS DIL                      1.0000  EACH
1                   FS    330-1069-   - -   RES  68 OHM 1/4W  5% FIXED COMP       215860     4.0000  EACH
1                   FS    330-2025-   - -   RES 240 OHM 1/4W 5% FIXED COMP                   1.0000  EACH
1                   FS    330-3013-   - -   RES 1.2K 1/4W 5% FIXED COMP           211520     3.0000  EACH
1                   FS    330-4020-   - -   RES  20K OHM 1/4W 10% FIXED COMP                 1.0000  EACH
1                   FS    330-5010-   - -   RES 100K OHM 1/4W 10% FIXED COMP                 1.0000  EACH
1                   FS    331-2012-   - -   RES  120 OHM 1/2W 10% FIXED COMP      PATREL     8.0000  EACH 00001
1                   IN    333-0812-   - -   RES 4.7K OHM SIP 9/PKG                211520     4.0000  EACH
1                   IN    350-0057-   - -   60P 90 DEG HDR ASSY PCB LK & EJECT    211520     1.0000  EACH
1                   IN    350-1051-   - -   CONN,25 POS SUBMIN SKT PC TAIL        211520     4.0000  EACH
1                   IN    370-0026-   - -   LAMP,RED -LED- MV5024                            1.0000  EACH
1                   IN    375-1012-   - -   MPS 6512 SILICON TRANSISTOR           PATREL     4.0000  EACH
1                   IN    375-1014-   - -   MPS 6518 SILICON TRANSISTOR           PATREL     4.0000  EACH
1                   IN    376-0056-   - -   IC 7407 HEX BUF DRIVER HV OUTPUT                 1.0000  EACH
1                   IN    376-0076-   - -   IC 75150P 2 LINE DRIVER               211520    12.0000  EACH
1                   IN    376-0077-   - -   IC 75154  4 LINE REC                  211520     6.0000  EACH
1                   IN    376-0080-   - -   IC 74123 RETRIGGER MONOSTABLE MVB     PATREL     2.0000  EACH
1                   IN    376-0153-   - -   IC 74LS08 4 2 IN POS AND GATE                    2.0000  EACH
1                   IN    376-0155-   - -   IC 74LS74 2 D TYPE EDGE TRIG FF                  1.0000  EACH
1                   IN    376-0158-   - -   IC 74LS155 2 2 4 LINE DECODER MX      211520     4.0000  EACH
1                   IN    376-0160-   - -   IC 74LS175 4 D TYPE EDGE TRIG F/F                5.0000  EACH
1                   IN    376-0180-   - -   IC 74LS04 HEX INVERTER                           2.0000  EACH
1                   IN    376-0197-   - -   IC 74S04 HEX INVERTER                 PATREL     1.0000  EACH
1                   IN    376-0202-   - -   IC 74S74 2 D TYPE F F W PRESET CLER              1.0000  EACH
1                   IN    376-0208-   - -   IC 74LS02 4 2 IN POS NOR GATE                    1.0000  EACH
1                   IN    376-0209-   - -   IC 74LS10 3 3 IN POS NAND GATE                   1.0000  EACH
1                   IN    376-0210-   - -   IC 74LS20 2 4 IN POS NAND GATE                   1.0000  EACH
1                   IN    376-0211-   - -   IC 74LS32 4 2 IN POS OR GATE                     1.0000  EACH
1                   IN    376-0216-   - -   IC 74LS157 4 2-1 LINE DATA SELC MX               4.0000  EACH
1                   IN    376-0218-   - -   IC 74LS85  4 BIT MAGNITUDE COMPARAT              1.0000  EACH
1                   IN    376-0222-   - -   IC 74LS251 DATA SEL MX 3 STATE OUT               1.0000  EACH
1                   IN    376-0288-   - -   IC 74LS244 OCTUAL BUF/LINE DR 3 OUT              3.0000  EACH
1                   IN    376-0294-   - -   IC 74LS138 3-8 LINE DECODER/MPX                  1.0000  EACH
1                   IN    376-0297-   - -   IC 74LS240 OCTAL BUF/LINE DR/LN REC PATREL       2.0000  EACH
1                   IN    376-0302-   - -   IC 74LS273 OCTAL D-TYPE F/F W/CLEAR 211520       1.0000  EACH
1                   IN    376-0486-   - -   IC 74LS125 QUAD BUS BUFF TRI-ST L P              1.0000  EACH
1                   IN    376-0544-   - -   IC 74LS534 OCTAL D-TYPE FLIP/FLOP/  211520       2.0000  EACH
1                   IN    376-9011-   - -   IC 40 PIN SOCKET BURNDY # DILB240P1 211520       2.0000  EACH
1                   IN    376-9015-   - -   IC 20 PIN SOCKET BURNDY               211520     2.0000  EACH
1                   IN    380-1012-   - -   DIO IN914A SIGNAL 75 PRV              PATREL     1.0000  EACH
1                   IN    449-0241-   - -   SPACER PC BOARD II      C06805-1002 211520       4.0000  EACH
1                   IN    452-2832-XA- -    OBS EC215230 USE 452-2832-XB          211520     1.0000  EACH
1                   IN    461-3141-   - -   SCREW CAP HOUSING 86422-233           211520     2.0000  EACH
1                   IN    461-3405-   - -   SCR CAP 8-32 2260C        86422-231   211520     2.0000  EACH
1                   IN    462-0211-   - -   4-40 X 1/4L X 3/16OD HEF SPACER       211520     8.0000  EACH
1                   IN    462-0496-   - -   SPACER, FACE PLT REWORK [illegible] 805-1004 211520  1.0000  EACH
```

```
MB0008         S I N G L E - L E V E L    B I L L    O F    M A T E R I A L  AS OF               RUN DATE- 12/19/81          PAGE      2

ASSEMBLY PART NUMBER  209-7874-  - -        *** PHANTOM ***  LEGEND
ASSEMBLY DESCRIPTION  PCA MXE TC CONTROLLER MOTHER BD       1- P-PHANTOM- 2- ITEM MASTER DELY CODE- 3- *-TAGGED OUT OF KIT-PROD STR-

  POSITION  IN  LEGEND    COMPONENT           DESCRIPTION                     E C N   QUANTITY   U/M  L/T
   STRUCTURE     1 2 3   PART  NUMBER                                                  PER ASSY

1                   IN    519-7874-   - -   PCB MXE TC CONTROLLER MOTHER BD       /              1.0000  EACH
1                   IN    615-1762-XA- -    TRIMSTRIP FCPLT -UPPER- B06611-0419 21152D /   1.0000  EACH
1                   IN    615-1765-   - -   TRIMSTRIP FP -LOWER-    C06611-0421 21152D  /  1.0000  EACH
```

```
ME1008-A     S I N G L E - L E V E L    B I L L    O F    M A T E R I A L  AS OF                 RUN DATE:

ASSEMBLY PART NUMBER  210-7874-A - -                           LEGEND
ASSEMBLY DESCRIPTION  PCA MXE TC CONTROLLER MOTHER BD          1: P=PHANTOM; 2: ITEM MASTER DELY CODE; 3:

  POSITION  IN  LEGEND    COMPONENT             DESCRIPTION                     E C N    QUANTITY   U/M  L/T
   STRUCTURE     1 2 3   PART  NUMBER                                                     PER ASSY

1                 I IN    209-7874-   - -   PCA MXE TC CONTROLLER MOTHER BD                      1.0000  EACH
1                   IN    377-0371-   - -   IC Z80 CTCA 28 PIN [illegible]          PATREL       - 2.0000  EACH
1                   IN    377-0423-   - -   IC SIO DART DUAL ASYNC RECVR TRNSMT PATREL         - 2.0000  EACH
                                             2 [illegible] / \
MD0080-A      S I N G L E - L E V E L    B I L L    O F    M A T E R I A L  AS OF                RUN DATE- 12/31/81          PAGE     1

ASSEMBLY PART NUMBER  209-7973-  - -        *** PHANTOM ***  LEGEND
ASSEMBLY DESCRIPTION  PCA 2236 IC CONTROLLER DR BD           1- P-PHANTOM- 2- ITEM MASTER DELY CODE- 3- *-TAGGED OUT OF KIT-PROD STR-

 POSITION  IN  LEGEND     COMPONENT            DESCRIPTION                            E C N   QUANTITY    U/M  I/T
  STRUCTURE     1  2 3   PART  NUMBER                                                        PER ASSY

1                   IN    300-1033-   - -   CAP 33 PF 10% 500 V CERAMIC DISC                     1.0000  EACH
1                   IN    300-1930-   - -   .1 UF 50V +80-20% CERAMIC CAP-MIFRQ PATREL          13.0000  EACH
1                   IS    300-1966-   - -   CAP .047 UF 50V+80-20% CERAMIC MLD  PATREL          26.0000  EACH
1                   IS    300-4022-   - -   CAP  15.0  UF 20 V 10% TANT AXIAL   PATREL           3.0000  EACH 00001
1                   IS    330-1023-   - -   RES  22 OHM 1/4W  5% FIXED COMP                      1.0000  EACH
1                   IS    330-1034-   - -   RES   33  OHM 1/4W 5% FIXED COMP                    12.0000  EACH
1                   IS    330-2023-   - -   220 OHM 1/4 W 5%.4 RSTR                              1.0000  EACH
1                   IS    330-2040-   - -   RES 470 OHM 1/4W  5% FIXED COMP                      1.0000  EACH
1                   IS    330-2083-   - -   RES 820 OHM 1/4W  5% FIXED COMP                      1.0000  EACH
1                   IN    333-0312-   - -   RES 4.7K OHM SIP 9/PKG                               2.0000  EACH
1                   IN    350-0201-   - -   CONN HDR 2 POS .100 1 ROW STR PIN                    1.0000  EACH
1                   IN    350-4506-   - -   CONN 2 POS. SHUNT .100 CTR  22360C                   1.0000  EACH
1                   IN    375-1003-   - -   TSTR 2N3640 0.2W SH PNP S                            1.0000  EACH
1                   IN    376-0153-   - -   IC 74LS08 4 2 IN POS AND GATE                        2.0000  EACH
1                   IN    376-0155-   - -   IC 74LS74 2 D TYPE EDGE TRIG FF      PATREL          1.0000  EACH
1                   IN    376-0183-   - -   IC 74LS04 HEX INVERTER                               2.0000  EACH
1                   IN    376-0197-   - -   IC 74S04 HEX INVERTER                                1.0000  EACH
1                   IN    376-0203-   - -   IC 74S08 4 2 IN POS AND GATE                         1.0000  EACH
1                   IN    376-0202-   - -   IC 74S74 2 D TYPE F F W PRESET CLER                  3.0000  EACH
1                   IN    376-0205-   - -   IC 74S32 4 2 IN POS OR GATE          PATREL          1.0000  EACH
1                   IN    376-0207-   - -   IC 74LS10 3 3 IN POS NAND GATE                       1.0000  EACH
1                   IN    376-0211-   - -   IC 74LS32 4 2 IN POS OR GATE                         1.0000  EACH
1                   IN    376-0226-   - -   IC 74LS139 2 2-4 LINE DECODE                         1.0000  EACH
1                   IN    376-0233-   - -   IC 74LS161 SYN CTR DIRECT CLEAR                      1.0000  EACH
1                   IN    376-0242-   - -   IC 74LS280 9 BIT ODD EVEN PARITY GN PATREL           1.0000  EACH
1                   IN    376-0284-   - -   IC 74LS241 OCT BUF&LINE DR W/TRI ST                  2.0000  EACH
1                   IN    376-0285-   - -   IC 74LS245 8 BUS TRANS W/TR ST OUTP                  1.0000  EACH
1                   IN    376-0286-   - -   IC 74LS374 8 LATCHES   W/TR ST OUTP                  2.0000  EACH
1                   IN    376-0283-   - -   IC 74LS244 OCTUAL BUF/LINE DR 3 OUT                  1.0000  EACH
1                   IN    376-0294-   - -   IC 74LS138 3-8 LINE DECODER/MPX                      1.0000  EACH
1                   IN    376-0486-   - -   IC 74LS125 QUAD BUS BUFF TRI-ST L P                  2.0000  EACH
1                   IN    376-9001-   - -   IC 14 PIN SOCKET SOLDER TAIL         PATREL          1.0000  EACH
1                   IN    376-9002-   - -   IC 16 PIN SOCKET BURNDY                              9.0000  EACH
1                   IN    376-9003-   - -   IC 24 PIN SOCKET BURNDY              PATREL          2.0000  EACH
1                   IN    376-9011-   - -   IC 40 PIN SOCKET BURNDY # DILB240P1                  1.0000  EACH
1                   IN    510-7973-   - -   PCB 2236 MXE IC CONTROLLER DR BD                     1.0000  EACH
1                   IN    654-1192-   - -   TERMINAL,SINGLE NECK PMP 103-W/U-77 PATREL           2.0000  EACH
```

```
MD3080-A      S I N G L E - L E V E L    B I L L    OF    M A T E R I A L  AS OF                 RUN DATE- 11/19/81          PAGE      1

ASSEMBLY PART NUMBER  210-7973-A - -                          LEGEND
ASSEMBLY DESCRIPTION  PCA 2236 MXF CONTROLLER DR BD           1- P-PHANTOM- 2- ITEM MASTER DELY CODE- 3- *-TAGGED OUT OF KIT-PROD STR-

  POSITION  IN  LEGEND    COMPONENT            DESCRIPTION                          E C N   QUANTITY   U/M  L/T
   STRUCTURE     1  2 3   PART  NUMBER                                                      PER ASSY

1                  IN    209-7973-   - -   PCA 2236 TC CONTROLLER DR BD                      1.0000  EACH
1                  IN    377-0368-   - -   IC Z80A CPU 40 PIN                                1.0000  EACH
1                  IN    377-0417-   - -   IC HM4864-2 64KX1 DYN RAM-150 NS                ✓ 9.0000  EACH
1                  IN    377-0418-   - -   IC 2732A 4KX8 ERASABLE PROM 200NS                 2.0000  EACH
```

SECTION

7

APPENDI-
CES

THE SCHEMATICS, WHEN AVAILABLE, ARE ON THE LAST FICHE IN THIS SET.

SECTION 7

APPENDICIES

A. Schematics

B. RS-232-C Loop Back Connector Wiring Diagram
(Loop Back Connector Plug P/N--WLI 420-1040)

RS-232 LOOP BACK CONNECTOR WIRING DIAGRAM

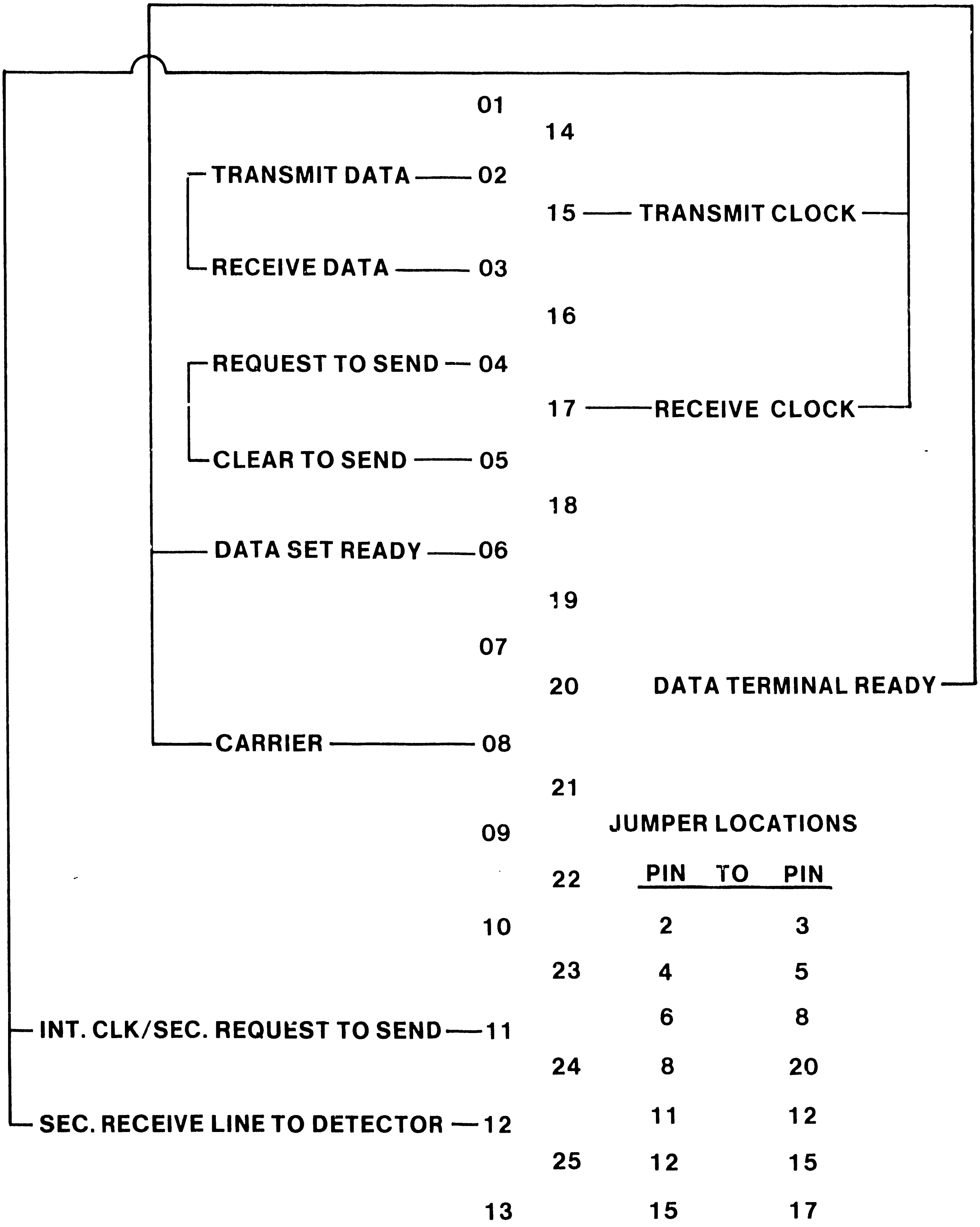
01
14
TRANSMIT DATA — 02
15 — TRANSMIT CLOCK
RECEIVE DATA — 03
16
REQUEST TO SEND — 04
17 — RECEIVE CLOCK
CLEAR TO SEND — 05
18
DATA SET READY — 06
19
07
20 DATA TERMINAL READY
CARRIER — 08
21
09
22
10
23
INT. CLK/SEC. REQUEST TO SEND — 11
24
SEC. RECEIVE LINE TO DETECTOR — 12
25
13

JUMPER LOCATIONS

PIN	TO	PIN
2		3
4		5
6		8
8		20
11		12
12		15
15		17

SECTION
7
APPENDI-
CES

SECTION 7

APPENDICIES

A. Schematics

B. RS-232-C Loop Back Connector Wiring Diagram
(Loop Back Connector Plug P/N--WLI 420-1040)

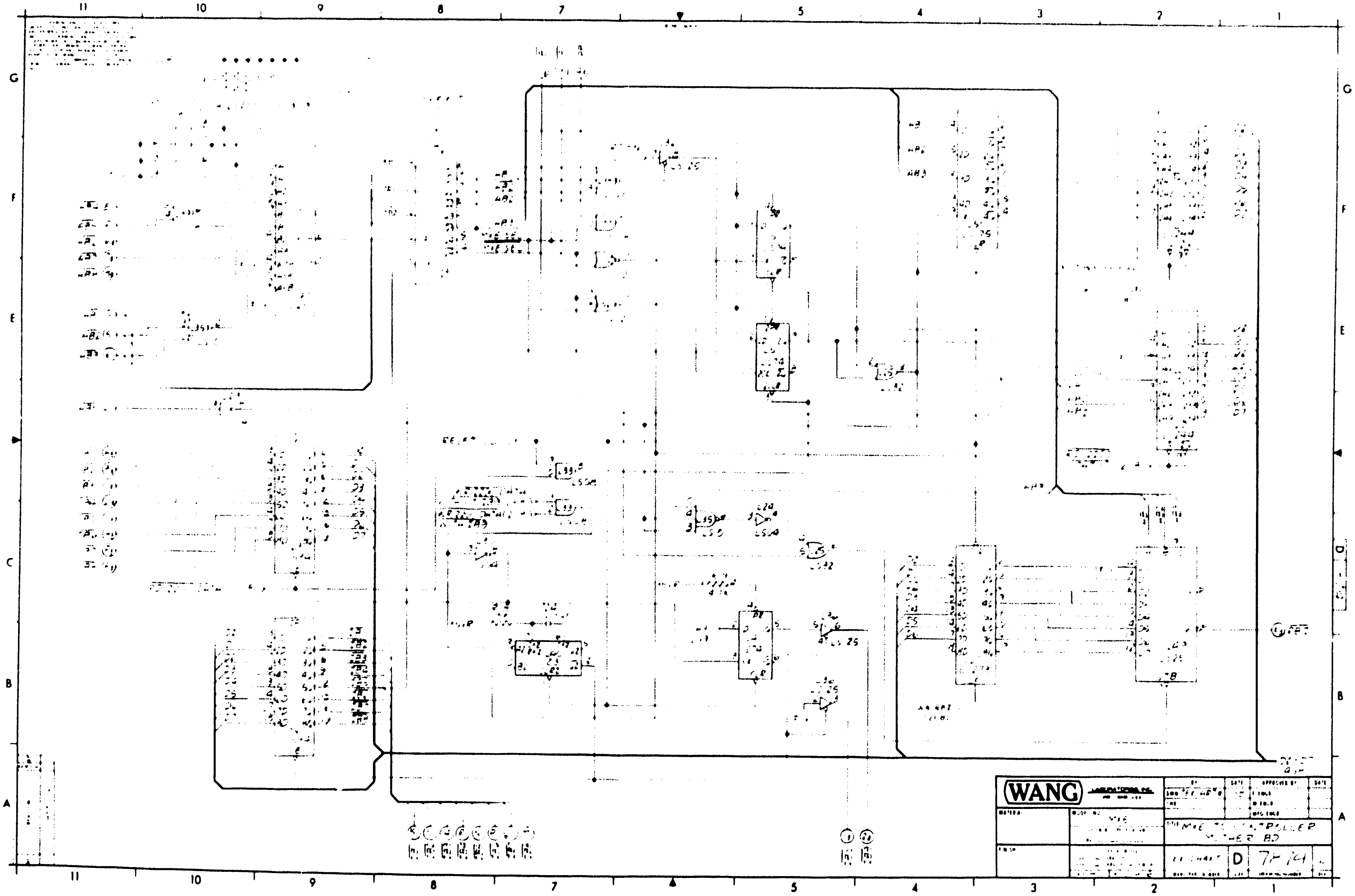

11
10
9
8
7
5
4
3
2
1
G
F
E
C
B
A
D
WANG
CONTROLLER
MOTHER BD
D

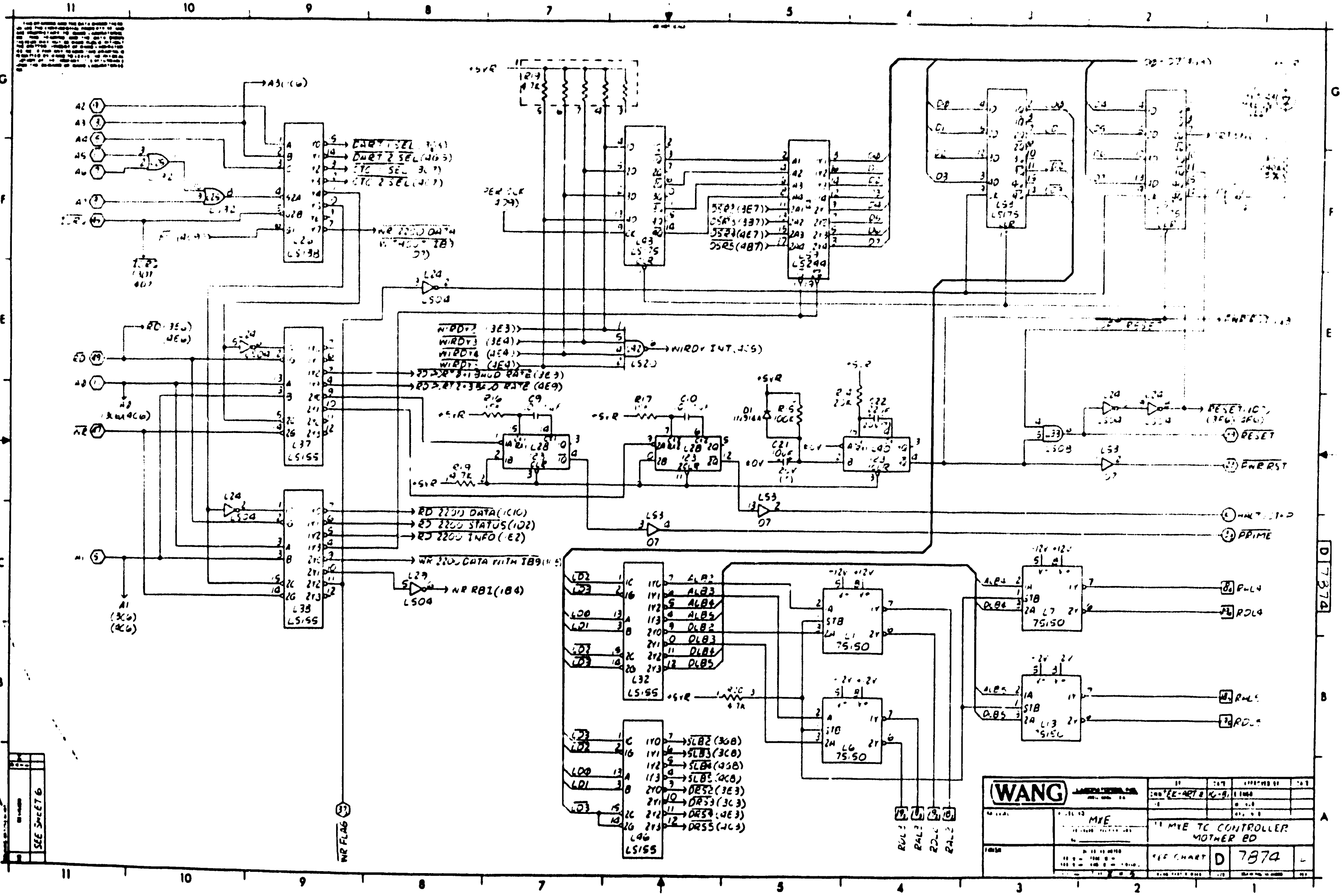
WANG
MXE
MXE TC CONTROLLER MOTHER BD
SEE CHART
D
7874
SEE SHEET 6
A2
A3
A4
A5
A6
A7
A3 (C6)
CART 1 SEL
CART 2 SEL
CTC 1 SEL
CTC 2 SEL
WR 2200 DATA WITHOUT TB
L26
LS138
L32
RD
A8
A1
RD 2200 DATA (1C10)
RD 2200 STATUS (1D2)
RD 2200 INFO (1E2)
WR 2200 DATA WITH TB9
WR RB1 (1B4)
L37
LS155
L38
LS155
L24
LS04
L29
LS04
WR FLAG
+5VR
R19
4.7K
PER CLK
L43
LS175
L33
LS244
DSR2 (3E7)
DSR3 (3B7)
DSR4 (4E7)
DSR5 (4B7)
WIRDY2 (3E3)
WIRDY3 (3E4)
WIRDY4 (4E4)
WIRDY5 (4E4)
L42
LS20
WIRDY INT (4C5)
R16
C9
L28
R17
C10
R18
C11
D1
1N914A
R5
100K
C21
L23
L53
07
L33
LS08
L55
LS175
RESET
PWR RST
HALT/STEP
PRIME
LD2
LD3
LD0
LD1
ALB2
ALB3
ALB4
ALB5
DLB2
DLB3
DLB4
DLB5
SLB2 (3C8)
SLB3 (3C8)
SLB4 (4C8)
SLB5 (4C8)
DRS2 (3E3)
DRS3 (3C3)
DRS4 (4E3)
DRS5 (4C3)
L46
LS155
+12V
-12V
L1
L6
L7
L13
75150
R20
4.7K
RDL4
RDL5
RDL2
RDL3
RAL2
RAL3
11
10
9
8
7
6
5
4
3
2
1
G
F
E
C
B
A

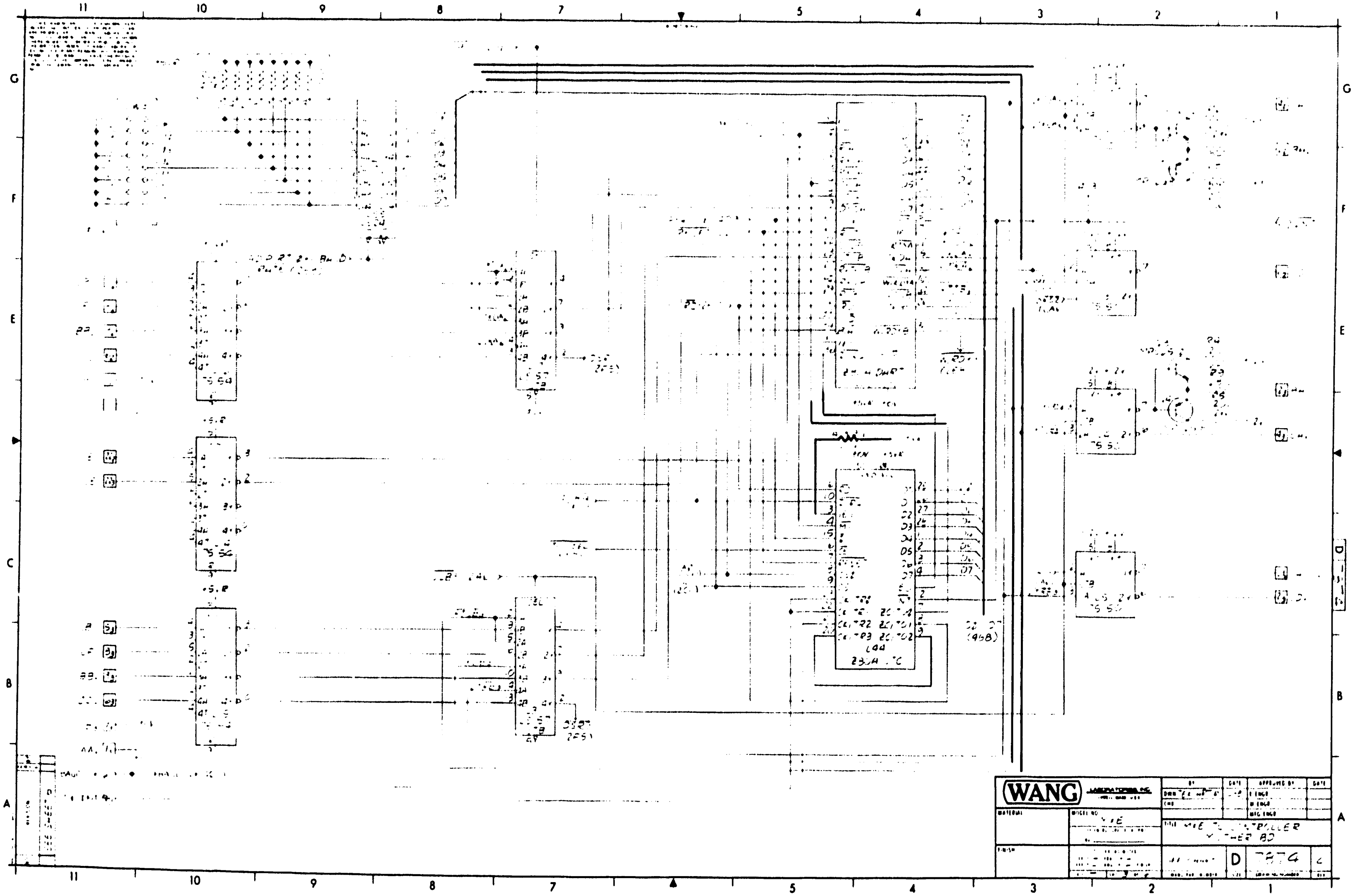
WANG
MATERIAL
MODEL NO
FINISH
TITLE ...TROLLER ...THER BD
D
7874
CTC1 CTC2 CTC3
(96B)

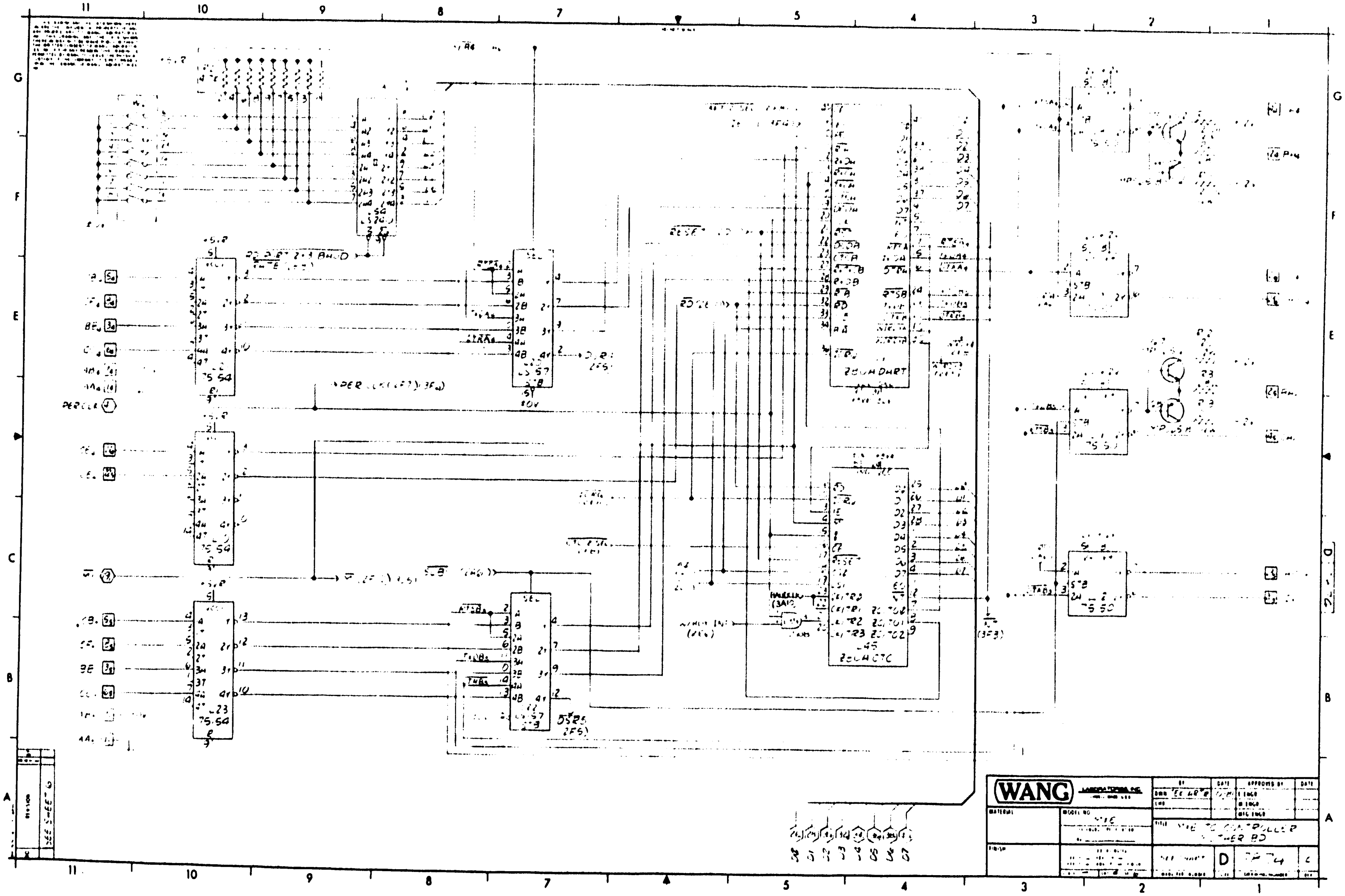
11
10
9
8
7
5
4
3
2
1
G
F
E
C
B
A
75 S4
75 S4
75 S4
LS 57
LS 57
Z80A DART
Z80A CTC
75 S0
75 S0
75 S0
RESET
PER CLK
WANG LABORATORIES INC.
MODEL NO
TITLE
CONTROLLER
BD
D

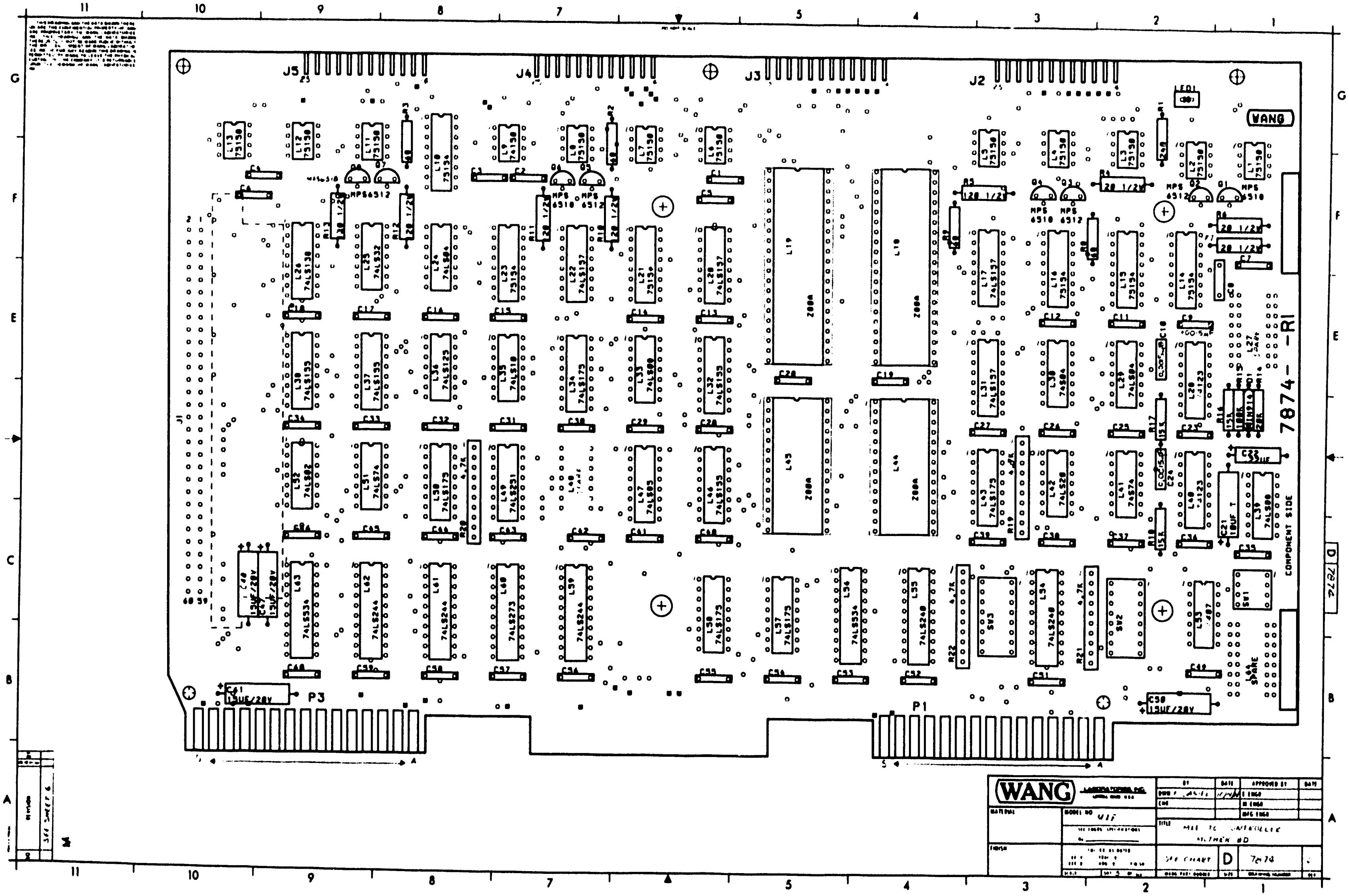
J5
J4
J3
J2
LED1
WANG
L13 75150
L12 75150
L11 75150
L10 75154
L9 75150
L8 75150
L7 75150
L6 75150
L5 75150
L4 75150
L3 75150
L2 75150
L1 75150
Q8 MPS6510
Q7 MPS6512
Q6 MPS 6510
Q5 MPS 6512
Q4 MPS 6510
Q3 MPS 6512
Q2 MPS 6512
Q1 MPS 6510
R5 120 1/2W
R4 20 1/2W
R6 20 1/2W
R7 20 1/2W
L26 74LS138
L25 74LS32
L24 74LS04
L23 75154
L22 74LS157
L21 75154
L20 74LS157
L19 Z80A
L18 Z80A
L17 74LS157
L16 75154
L15 75154
L14 75154
L38 74LS155
L37 74LS155
L36 74LS125
L35 74LS10
L34 74LS175
L33 74LS00
L32 74LS155
L31 74LS157
L30 74S04
L29 74LS04
L28 74123
L27
L52 74LS02
L51 74LS74
L50 74LS175
L49 74LS251
L48
L47 74LS05
L46 74LS155
L45 Z80A
L44 Z80A
L43 74LS175
L42 74LS20
L41 74S74
L40 74123
L39 74LS00
L63 74LS374
L62 74LS244
L61 74LS244
L60 74LS273
L59 74LS244
L58 74LS175
L57 74LS175
L56 74LS374
L55 74LS240
SW3
L54 74LS240
SW2
L53 7407
SW1
L64 SPARE
R20 4.7K
R19 4.7K
R22 4.7K
R21 4.7K
C22 33UF
C21 10UF T
C40 15UF/20V
C41 15UF/20V
C50 15UF/20V
J1
P3
P1
7874-R1
COMPONENT SIDE
D 7874
WANG LABORATORIES, INC.
MODEL NO MII
TITLE MII TC CONTROLLER
SEE CHART
D
7874
SHT 5 OF
11
10
9
8
7
6
5
4
3
2
1
G
F
E
D
C
B
A

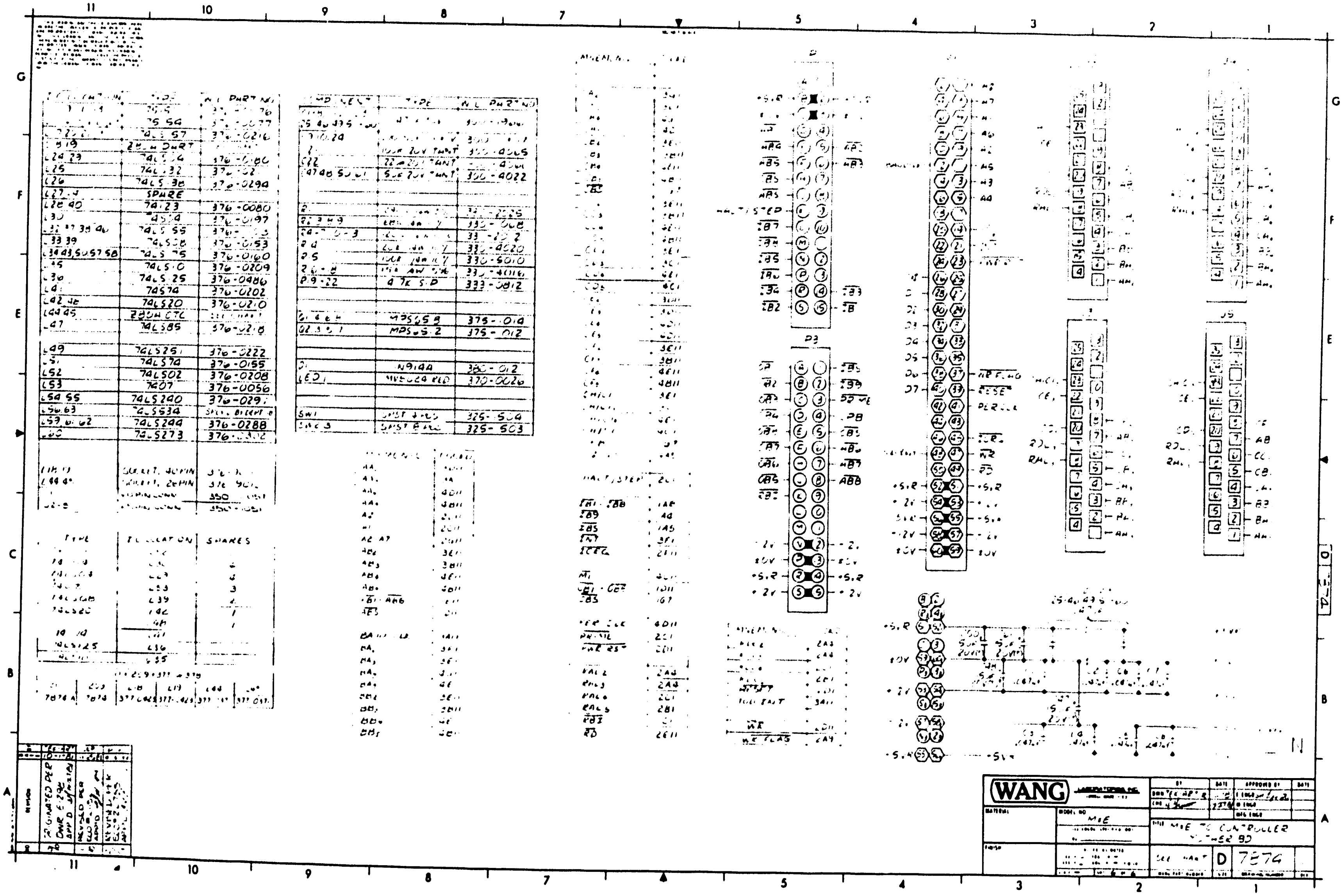

LOCATION	TYPE	WL PART NO.
[illegible]	[illegible]	[illegible]
[illegible]	75 54	376-0077
[illegible]	74LS 57	376-0216
L19	[illegible]	[illegible]
L24 23	[illegible]	[illegible]
L25	74LS32	[illegible]
L26	74LS 38	376-0294
[illegible]	SPARE	
L28 40	74123	376-0080
L30	[illegible]	376-0197
[illegible] 38 40	74LS 55	[illegible]
L33 39	74LS08	376-0153
L34 43,50 57 58	74LS 75	376-0160
L45	74LS10	376-0209
L36	74LS 25	376-0486
L41	74S74	376-0202
L42 46	74LS20	376-0210
L44 45	Z80A CTC	[illegible]
L47	74LS85	[illegible]
L49	74LS251	376-0222
L51	74LS74	376-0155
L52	74LS02	376-0208
L53	7407	376-0056
L54 55	74LS240	[illegible]
L56 63	[illegible]	[illegible]
[illegible]	74LS244	376-0288
[illegible]	74LS273	[illegible]
[illegible]	SOCKET, 40PIN	[illegible]
[illegible]	SOCKET, 28PIN	[illegible]
	[illegible]	350 [illegible]
[illegible]	[illegible]	[illegible]

REF DESIG	TYPE	WL PART NO.
[illegible]		
[illegible]	[illegible]	[illegible]
[illegible]	[illegible]	[illegible]
[illegible]	[illegible]	[illegible]
C22	[illegible] TANT	[illegible]
[illegible]	[illegible] TANT	[illegible]-4022
[illegible]	[illegible]	[illegible]
[illegible]	[illegible]	[illegible]
[illegible]	[illegible]	[illegible]
[illegible]	[illegible]	[illegible]
R5	[illegible]	330-5010
[illegible]	[illegible]	[illegible]
R9-22	[illegible]	333-0812
[illegible]	MPS6518?	375-0[illegible]
[illegible]	MPS[illegible]	375-012
[illegible]	N914A	380-[illegible]
LED1	[illegible] LED	370-0026
SW1	SPST [illegible]	325-504
[illegible]	SPST [illegible]	325-503

TYPE	LOCATION	SPARES
[illegible]	[illegible]	2
[illegible]	[illegible]	2
[illegible]	L53	3
74LS08	L39	[illegible]
74LS20	L42	1
	[illegible]	
[illegible]	[illegible]	1
74LS125	L36	
[illegible]	L55	

WANG LABORATORIES INC.

MODEL NO M1E

TITLE M1E TC CONTROLLER MOTHER BD

D 7274

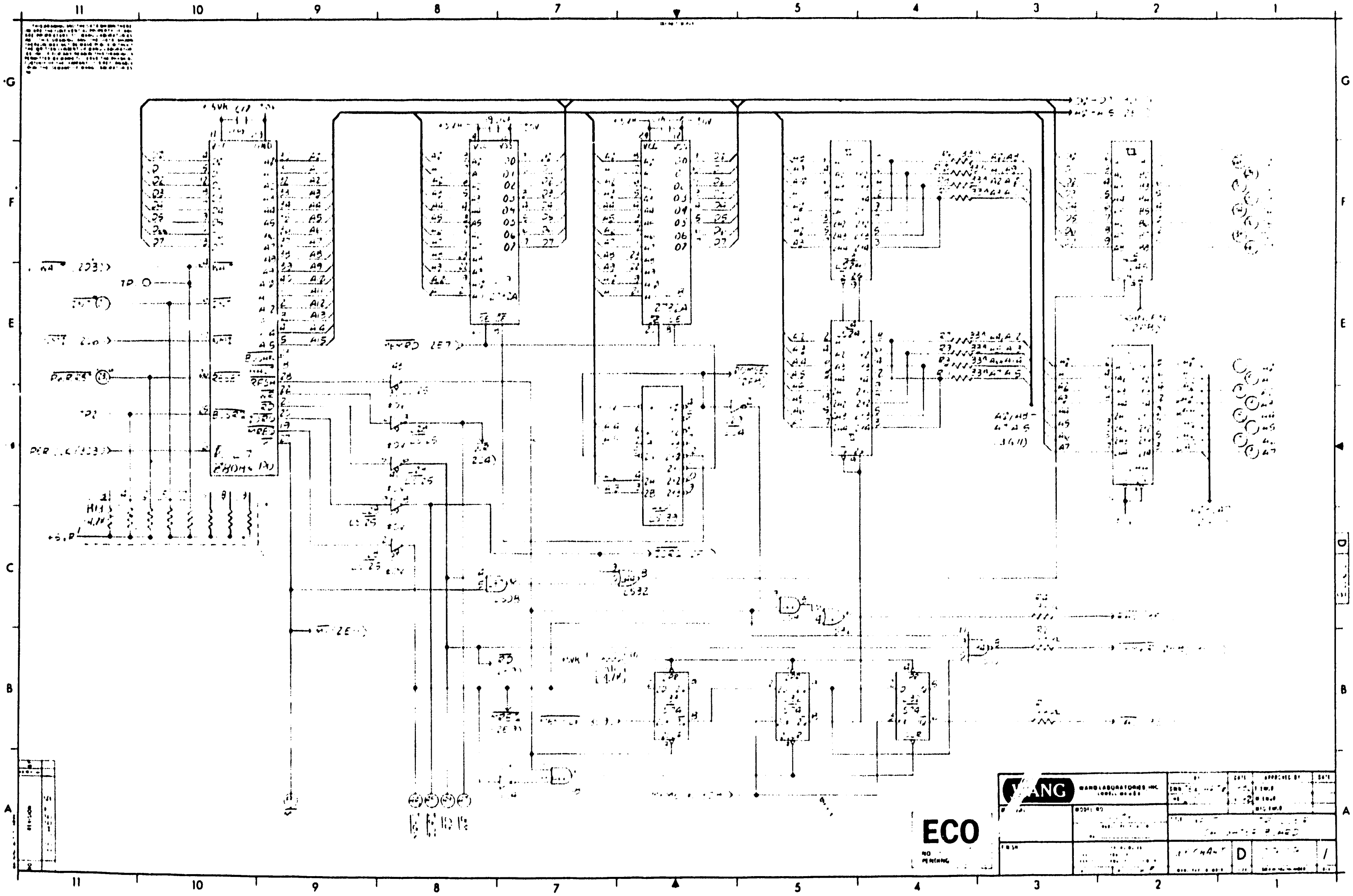11
10
9
8
7
5
4
3
2
1
G
F
E
C
B
A
D
TP
+5V
A1
A2
A3
A5
A6
A8
A9
A12
A15
D0
D1
D2
D3
D4
D5
D6
D7
O0
O1
O2
O3
O4
O5
O6
O7
VCC
VSS
WANG
WANG LABORATORIES, INC.
ECO
MODEL NO
D
/

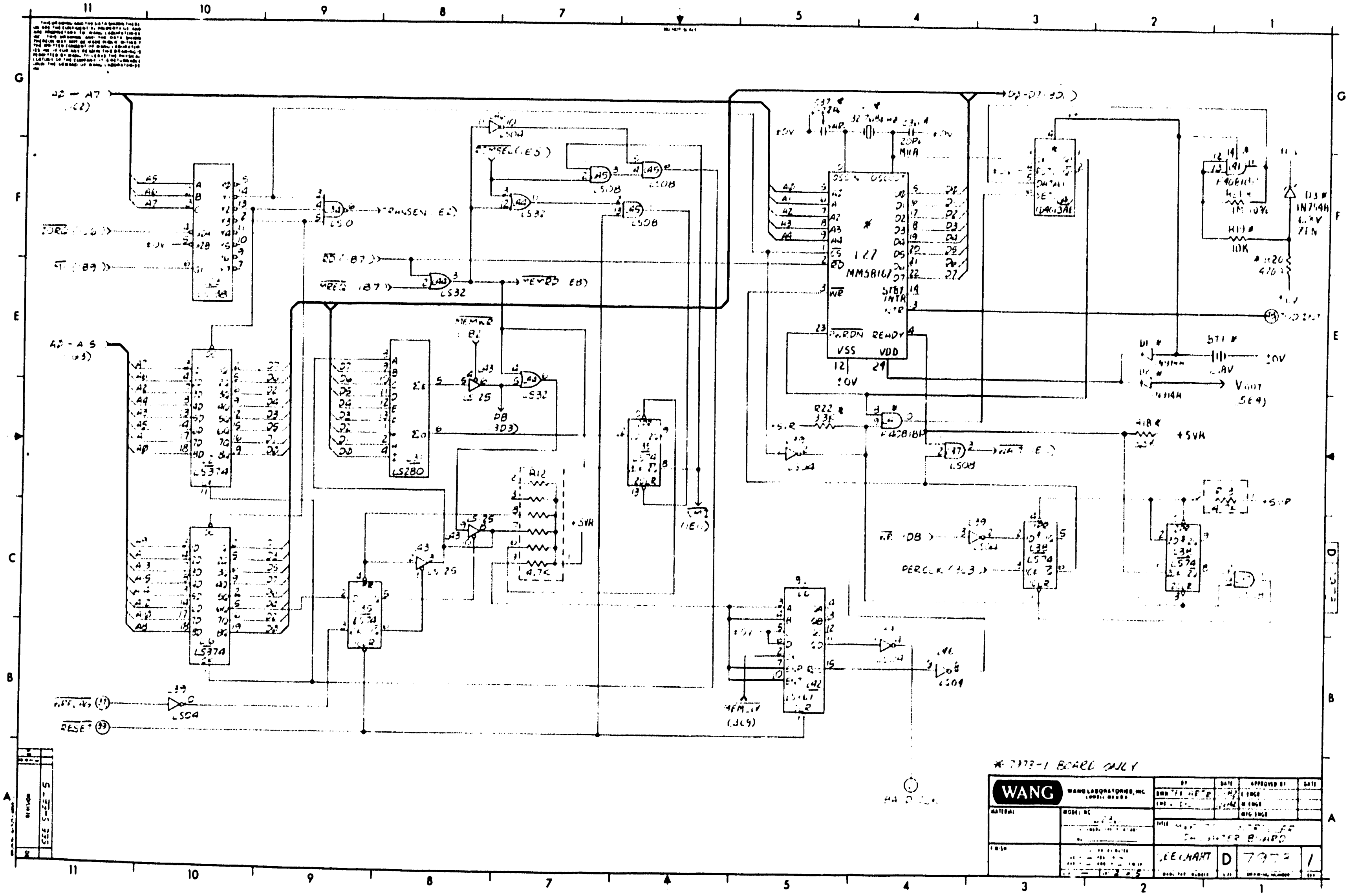
A0 — A7 (C2)
A5
A6
A7
FORG (C8)
ST (B9)
A0 - A5 (B3)
LS374
LS374
LS280
LS32
LS08
LS04
LS25
TRANSEN (E2)
TMSEL (E5)
RD (B7)
MREQ (B7)
MEMRD (E8)
MEMWR (E8)
PB (3D3)
R12
4.7K
+5VR
D0-D7 (G2)
32.768KHz
20Pf
MM58167
127
A0
A1
A2
A3
A4
CS
RD
WR
D0
D1
D2
D3
D4
D5
D6
D7
STBY INTR
INTR
PWRDN
READY
VSS
VDD
0V
CD4013AE
F4081BP
R19
10K
R20
470
D3
IN754A
6.8V
ZEN
D1
D2
IN914A
BT1
3.6V
VOUT (5E4)
R22
3.3K
+5VR
R18
+5VR
WAIT (E)
WR (D8)
PERCLK (3L3)
LS74
LS161
MEM_IV (3C9)
RESET
LS04
0V
* 7973-1 BOARD ONLY

WANG

WANG LABORATORIES, INC.

DEC CHART D 7973 1

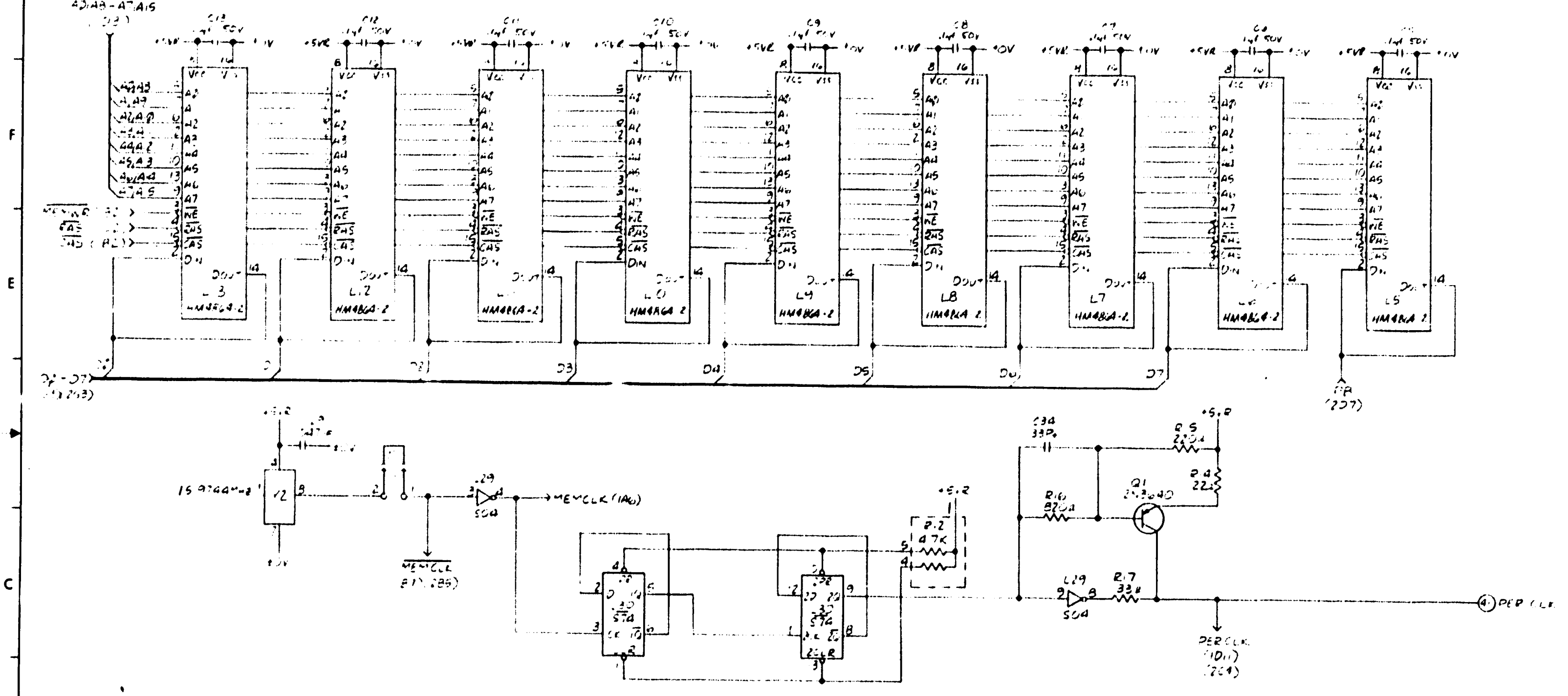

A0/A8 - A7/A15
(D3)
C12 .1µf 50V
C11
C10
C9
C8
C7
C6
C5
+5VR
0V
VCC
VSS
A0
A1
A2
A3
A4
A5
A6
A7
WE
RAS
CAS
DIN
DOUT
L3
L2
L1
L0
L9
L8
L7
L6
L5
HM4864-2
MEMWR
RAS
CAS
D0 - D7
D1
D2
D3
D4
D5
D6
D7
PP
(2D7)
+5.R
15.9744MHz
Y2
MEMCLK (1A6)
MEMCLK
LS04
R12 4.7K
LS74
C34 33Pf
R5
R4
R6
R7 33Ω
Q1
PER CLK
PER CLK (1D11)
(2C4)

WANG LABORATORIES, INC.

MODEL NO 2230

DWN TEL-APTP

TITLE ...E TO CONTROLLER, DAUGHTER BOARD

D 7973 1

SHEET 3 OF 3

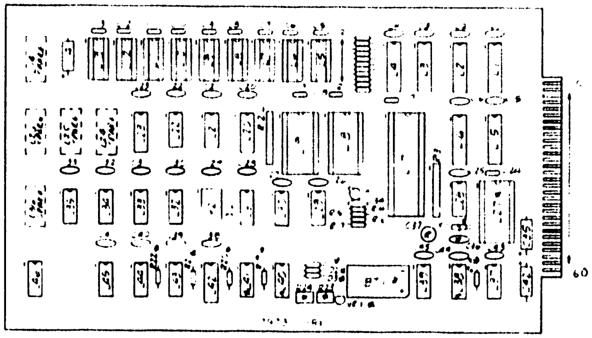

SEE SHEET 5

K. 7973 : BOARD ONLY

WANG
WANG LABORATORIES, INC.
LOWELL, MASS.

TITLE [illegible] CONTROLLER
[illegible] BOARD

SIZE	DRAWING NUMBER	REV
D	7974	1

IC LOCATION	TYPE	W.L. PART NO.
[illegible]	74LS244	376-0288
[illegible]	74LS374	376-0286
L3,4	74LS241	376-0284
L5-8	MM4864-2	SEE CHART
L4 24-26,30	SPARE	
L9	74LS245	376-0285
[illegible]	[illegible]	SEE CHART
L[illegible]9	2732A	SEE CHART
L20	74LS139	376-0226
L21	74S32	376-0205
L22	74S08	376-0200
[illegible]	74LS38	376-0294
[illegible]	MM58167	SEE CHART
L28 43	74LS125	376-0486
L29	74S04	376-0197
L30 32 33	74S74	376-0202
L31	74LS280	376-0242
L34	74LS00	376-0209
L35	74LS74	376-0155
L37 45	74LS08	376-0153
L39 40	74LS04	376-[illegible]90
L40	CD4013AE	SEE CHART
L41	F4081BP	SEE CHART
L42	74LS161	376-0233
L44	74LS32	376-0211
L38	74LS74	SEE CHART

TYPE	IC LOCATION	SPARES
74S32	L21	3
74S08	L22	2
74LS04	[illegible]	2
74S74	L33	1
74LS00	L34	1
[illegible]	L37	1
	L4[illegible]	1
CD4013AE	L40	1
F4081BP	L4	2
[illegible]	L[illegible]	[illegible]
	L46	4

COMPONENT	TYPE	W.L. PART NO.
C1-15,[illegible] 23,25-33,38- 4[illegible],43-45	[illegible] CER	[illegible]00-1966
C16,17,[illegible],24	[illegible] 5% CER.	[illegible]-930
C[illegible]4,35,42	15µF 20V TANT	300-4022
C34	33PF CER.	300-[illegible]033
C36	22PF [illegible]	SEE CHART
C37	2-22PF VAR.	SEE CHART
R1	33Ω 1/4W 5%	[illegible]
R2,3	4.7K 1/4W SIP	[illegible]-0812
R4	22Ω 1/4W 5%	[illegible]-[illegible]23
R5	220Ω 1/4W 5%	330-2023
R6	820Ω 1/4W 5%	330-2083
R8,22	3.3K 1/4W 5%	SEE CHART
R9	10K 1/4W 5%	SEE CHART
R20	[illegible] 1/4W 5%	SEE CHART
R7	1M 1/4W 10%	SEE CHART
R23	500Ω POT.	SEE CHART
R24	2K POT.	SEE CHART
BT1	BATTERY	SEE CHART
Y1	32.768 KHZ	SEE CHART
Y2	[illegible]44 MHZ	321-0059
D1,2	[illegible]	SEE CHART
D3	[illegible]754A	SEE CHART
Q1	[illegible]3640	375-[illegible]003
VR1	LM317	SEE CHART
F[illegible]	[illegible] 2POS.	[illegible]-45[illegible]
	2PIN HEADER	[illegible]209
[illegible]	[illegible]PIN	37[illegible]-9002
	SOCKET 40PIN	37[illegible]-9[illegible]
[illegible]	SOCKET 24PIN	376-9003
L27	SOCKET 8PIN	SEE CHART

MNEMONIC	COORD
A2-A7	7
BAUD CLK	2A4
D0-D7	[illegible]
[illegible]	E
[illegible]	4B
[illegible]	4[illegible]
$\overline{MREQ}$	4B
PER CLK	3C1
$\overline{PWRRST}$	E
$\overline{RD}$	4B
$\overline{RESET}$	2B
TOD INT	2E
$\overline{WR}$	4B
$\overline{[illegible]}$	2B1

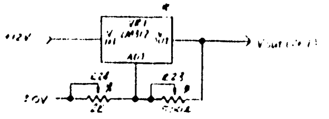

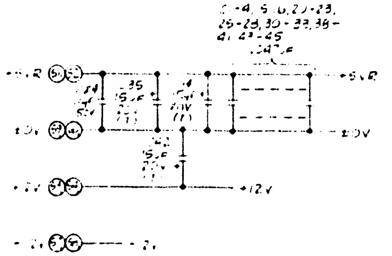

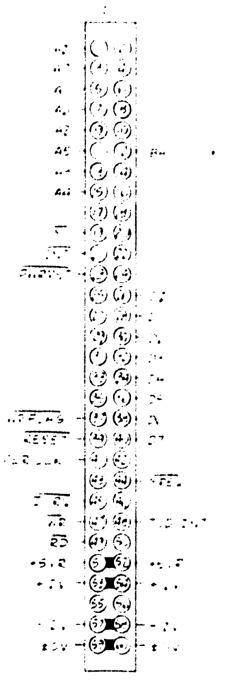

[illegible]																						
[illegible]	L01	L[illegible]	[illegible]	L[illegible]	C27	C[illegible]	C38	C40	C41	C36	C37	R8 22	R[illegible]	R20	R21	R23	R24	D1 2	D3	VR1	Y1	BT1
7973 A	[illegible]	[illegible]	[illegible]	377-[illegible]																		
7973-1A	[illegible]	377-34[illegible]	377-0165	377-[illegible]	376 [illegible]	[illegible]118	376-[illegible]53	376-[illegible]31	376-0378	300-5048	300-8002	330-3034	330-4011	330-[illegible]	330-6010	330-1024	330-4022	3[illegible]-1012	380-[illegible]	[illegible]	[illegible]	[illegible]

WANG
WANG LABORATORIES, INC.

MODEL NO. 2236

TITLE: [illegible] TO CONTROLLER DAUGHTER BOARD

D 70[illegible] 1

WANG LABORATORIES, INC

ONE INDUSTRIAL AVENUE, LOWELL, MASSACHUSETTS 01851, TEL (617) 459-5000, TWX 710 343-6769, TELEX 94-7421

PRINTED IN U.S.A.

END