Logic & Schematic Diagram
Diskette Drive
Models 270/272/277

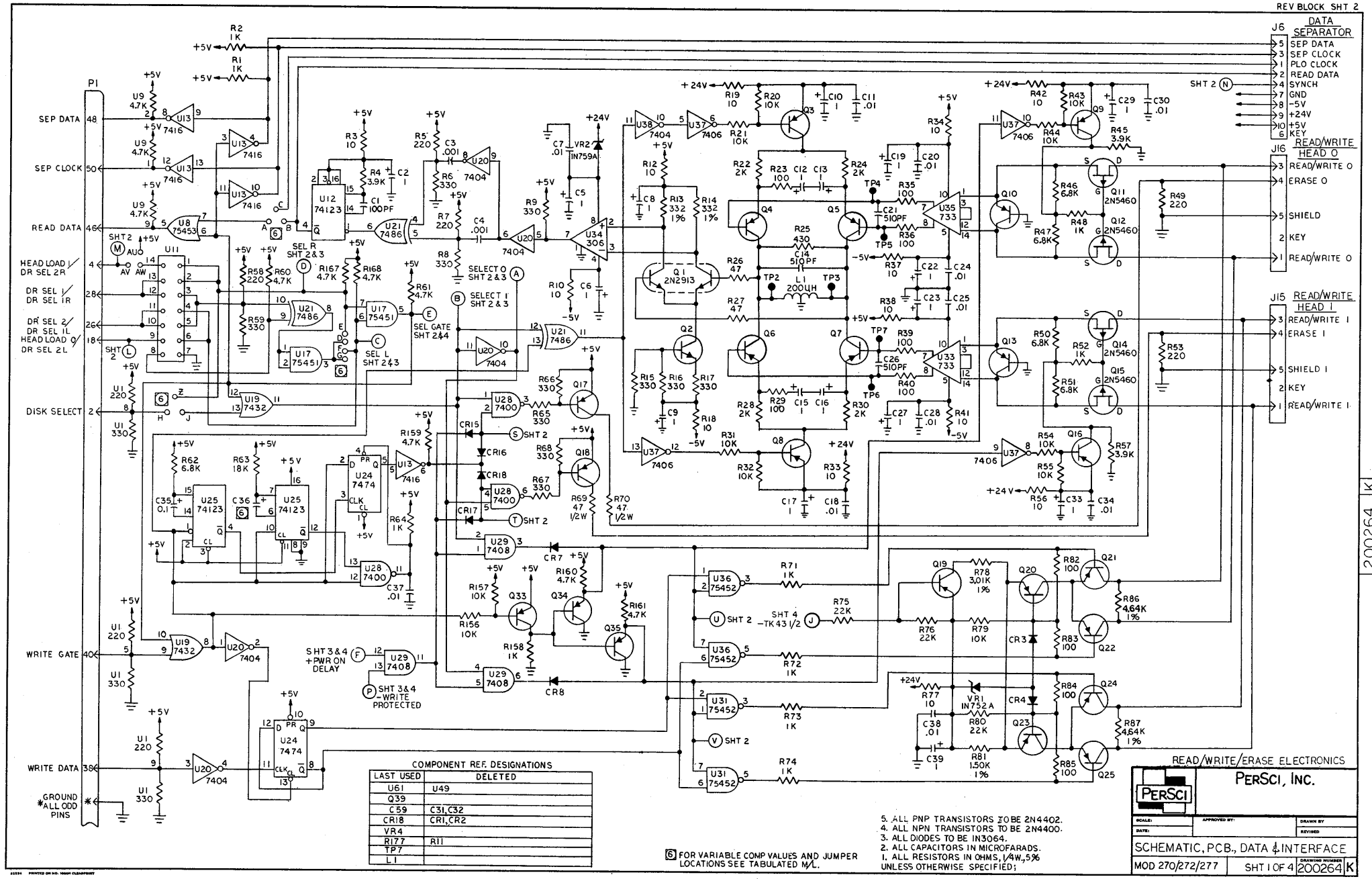
REV BLOCK SHT 2
J6 DATA SEPARATOR
5 SEP DATA
3 SEP CLOCK
1 PLO CLOCK
2 READ DATA
4 SYNCH
7 GND
8 -5V
9 +24V
10 +5V
6 KEY
SHT 2 N
J16 READ/WRITE HEAD 0
3 READ/WRITE 0
4 ERASE 0
5 SHIELD
2 KEY
1 READ/WRITE 0
J15 READ/WRITE HEAD 1
3 READ/WRITE 1
4 ERASE 1
5 SHIELD 1
2 KEY
1 READ/WRITE 1
P1
SEP DATA 48
SEP CLOCK 50
READ DATA 46
HEAD LOAD 1/ DR SEL 2R 4
DR SEL 1/ DR SEL 1R 28
DR SEL 2/ DR SEL 1L 26
HEAD LOAD 0/ DR SEL 2L 18
DISK SELECT 2
WRITE GATE 40
WRITE DATA 38
GROUND *ALL ODD PINS*
SEL R SHT 2&3
SEL 0 SHT 2&3
SEL 1 SHT 2&3
SEL GATE SHT 2&4
SEL L SHT 2&3
SHT 3&4 +PWR ON DELAY
SHT 3&4 -WRITE PROTECTED
SHT 4 -TK43 1/2
COMPONENT REF. DESIGNATIONS
LAST USED | DELETED
U61 | U49
Q39 |
C59 | C31, C32
CR18 | CR1, CR2
VR4 |
R177 | R11
TP7 |
L1 |
6 FOR VARIABLE COMP VALUES AND JUMPER LOCATIONS SEE TABULATED M/L.
5. ALL PNP TRANSISTORS TO BE 2N4402.
4. ALL NPN TRANSISTORS TO BE 2N4400.
3. ALL DIODES TO BE IN3064.
2. ALL CAPACITORS IN MICROFARADS.
1. ALL RESISTORS IN OHMS, 1/4W, 5% UNLESS OTHERWISE SPECIFIED;
READ/WRITE/ERASE ELECTRONICS
PERSCI, INC.
SCHEMATIC, PCB., DATA & INTERFACE
MOD 270/272/277
SHT 1 OF 4
200264 K
200264 K

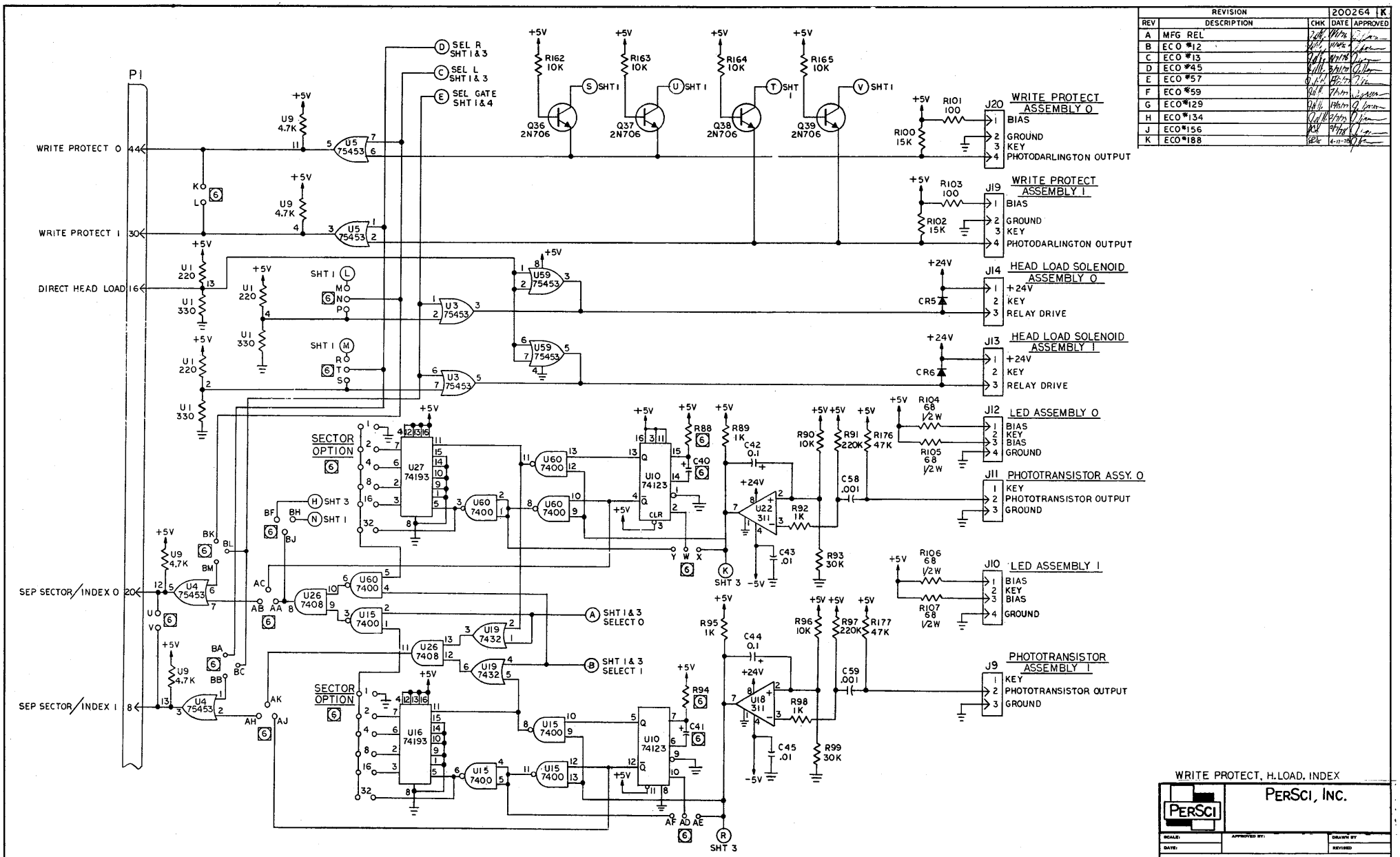

REVISION				200264 K
REV	DESCRIPTION	CHK	DATE	APPROVED
A	MFG REL			
B	ECO #12			
C	ECO #13			
D	ECO #45			
E	ECO #57			
F	ECO #59			
G	ECO #129			
H	ECO #134			
J	ECO #156			
K	ECO #188		4-11-78	

WRITE PROTECT, H.LOAD, INDEX

PERSCI, INC.

SCHEMATIC, PC B, DATA & INTERFACE

MOD 270/272/277 | SHT 2 OF 4 | 200264 K

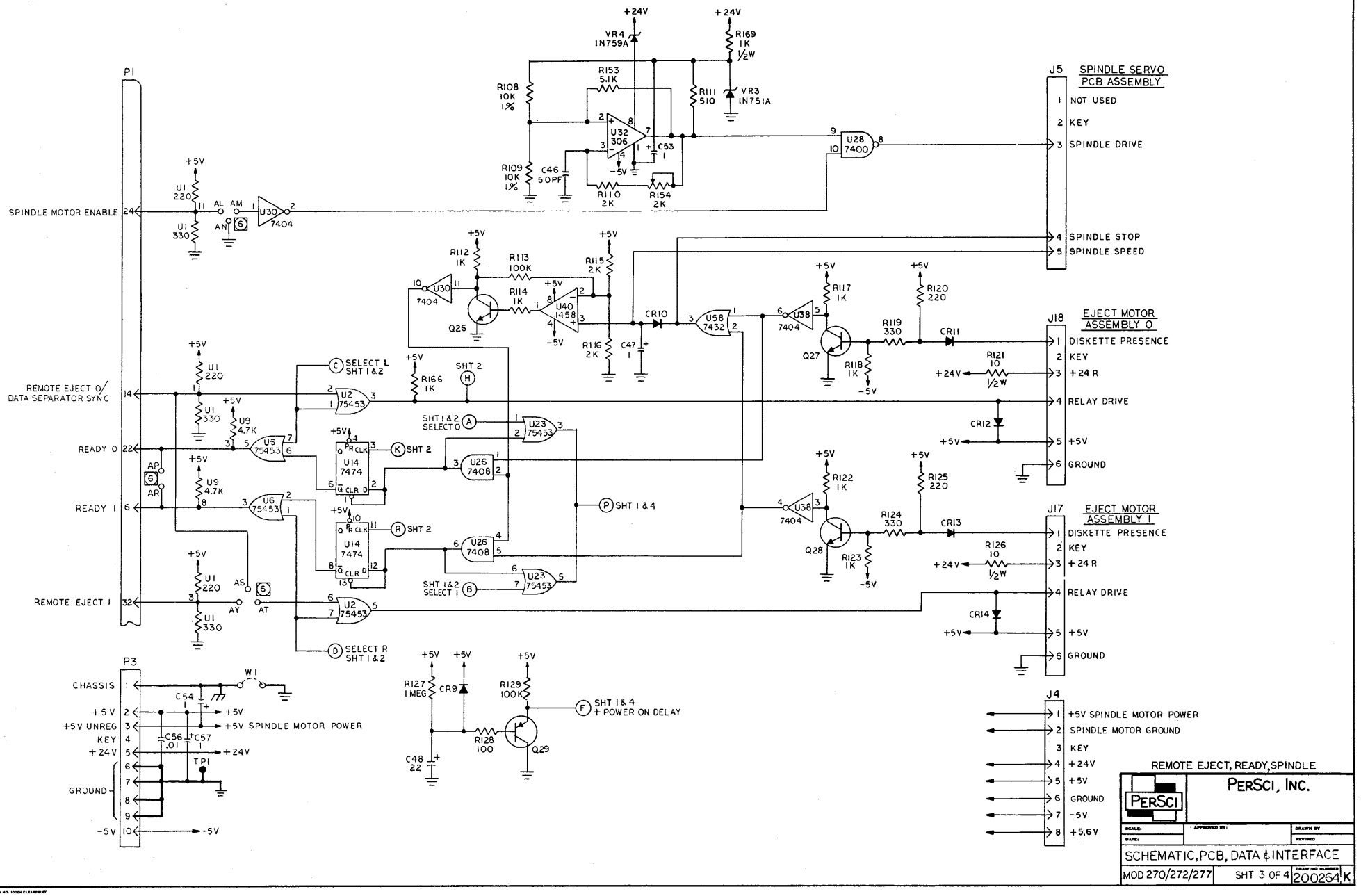
P1
SPINDLE MOTOR ENABLE
REMOTE EJECT 0/ DATA SEPARATOR SYNC
READY 0
READY 1
REMOTE EJECT 1
+24V
VR4 IN759A
R169 1K ½W
R153 5.1K
R108 10K 1%
R111 510
VR3 IN751A
U32 306
C53 1
R109 10K 1%
C46 510PF
R110 2K
R154 2K
U28 7400
J5 SPINDLE SERVO PCB ASSEMBLY
1 NOT USED
2 KEY
3 SPINDLE DRIVE
4 SPINDLE STOP
5 SPINDLE SPEED
U1 220
U1 330
U30 7404
R112 1K
R113 100K
R115 2K
U40 1458
R114 1K
Q26
R116 2K
C47 1
CR10
U58 7432
U38 7404
Q27
R117 1K
R118 1K
R119 330
R120 220
CR11
R121 10 ½W
J18 EJECT MOTOR ASSEMBLY 0
1 DISKETTE PRESENCE
2 KEY
3 +24 R
4 RELAY DRIVE
5 +5V
6 GROUND
CR12
U9 4.7K
U5 75453
U6 75453
U2 75453
U14 7474
U26 7408
U23 75453
R166 1K
SHT 2
SELECT L SHT 1&2
SELECT 0
SELECT 1
SELECT R SHT 1&2
SHT 1&4
AP
AR
AS
AT
AY
R122 1K
R123 1K
R124 330
R125 220
Q28
CR13
CR14
R126 10 ½W
J17 EJECT MOTOR ASSEMBLY 1
P3
CHASSIS
+5V
+5V UNREG
KEY
+24V
GROUND
-5V
W1
C54
C56 .01
C57 1
TP1
+5V SPINDLE MOTOR POWER
R127 1 MEG
CR9
R129 100K
R128 100
C48 22
Q29
SHT 1&4 + POWER ON DELAY
J4
1 +5V SPINDLE MOTOR POWER
2 SPINDLE MOTOR GROUND
3 KEY
4 +24V
5 +5V
6 GROUND
7 -5V
8 +5.6V
REMOTE EJECT, READY, SPINDLE
PERSCI, INC.
SCHEMATIC, PCB, DATA & INTERFACE
MOD 270/272/277
SHT 3 OF 4
200264, K

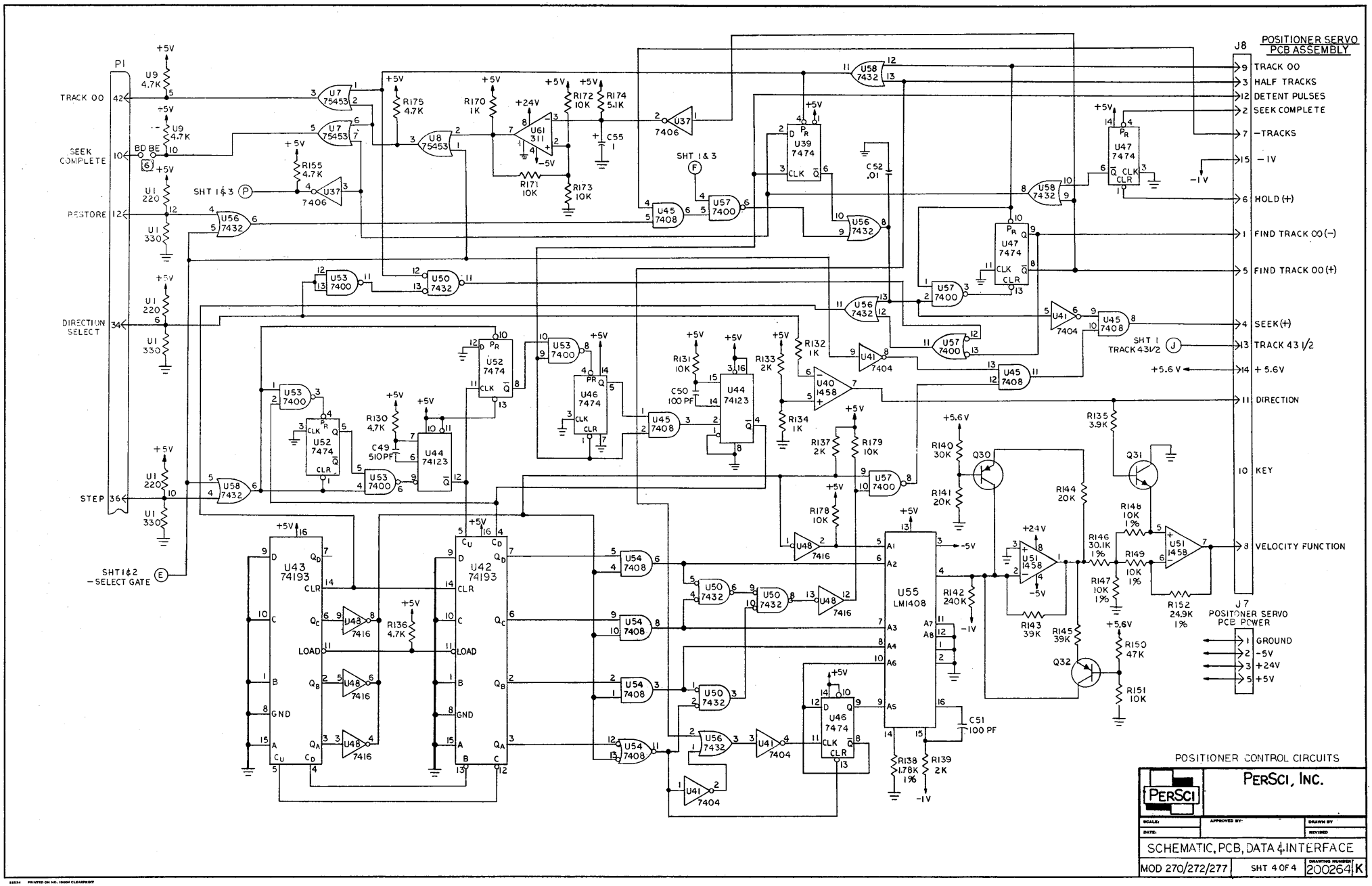
POSITIONER SERVO PCB ASSEMBLY
J8
TRACK 00
HALF TRACKS
DETENT PULSES
SEEK COMPLETE
-TRACKS
-1V
HOLD (+)
FIND TRACK 00 (-)
FIND TRACK 00 (+)
SEEK (+)
TRACK 43 1/2
+5.6V
DIRECTION
KEY
VELOCITY FUNCTION
J7
POSITIONER SERVO PCB POWER
GROUND
-5V
+24V
+5V
P1
TRACK 00
SEEK COMPLETE
RESTORE
DIRECTION SELECT
STEP
SHT 1&2 -SELECT GATE
SHT 1&3
SHT 1 TRACK 43 1/2
U55 LM1408
U43 74193
U42 74193
U44 74123
U52 7474
U46 7474
U47 7474
U39 7474
U40 1458
U51 1458
Q30
Q31
Q32
POSITIONER CONTROL CIRCUITS
PERSCI, INC.
SCALE:
DATE:
APPROVED BY:
DRAWN BY
REVISED
SCHEMATIC, PCB, DATA & INTERFACE
MOD 270/272/277
SHT 4 OF 4
DRAWING NUMBER 200264 K

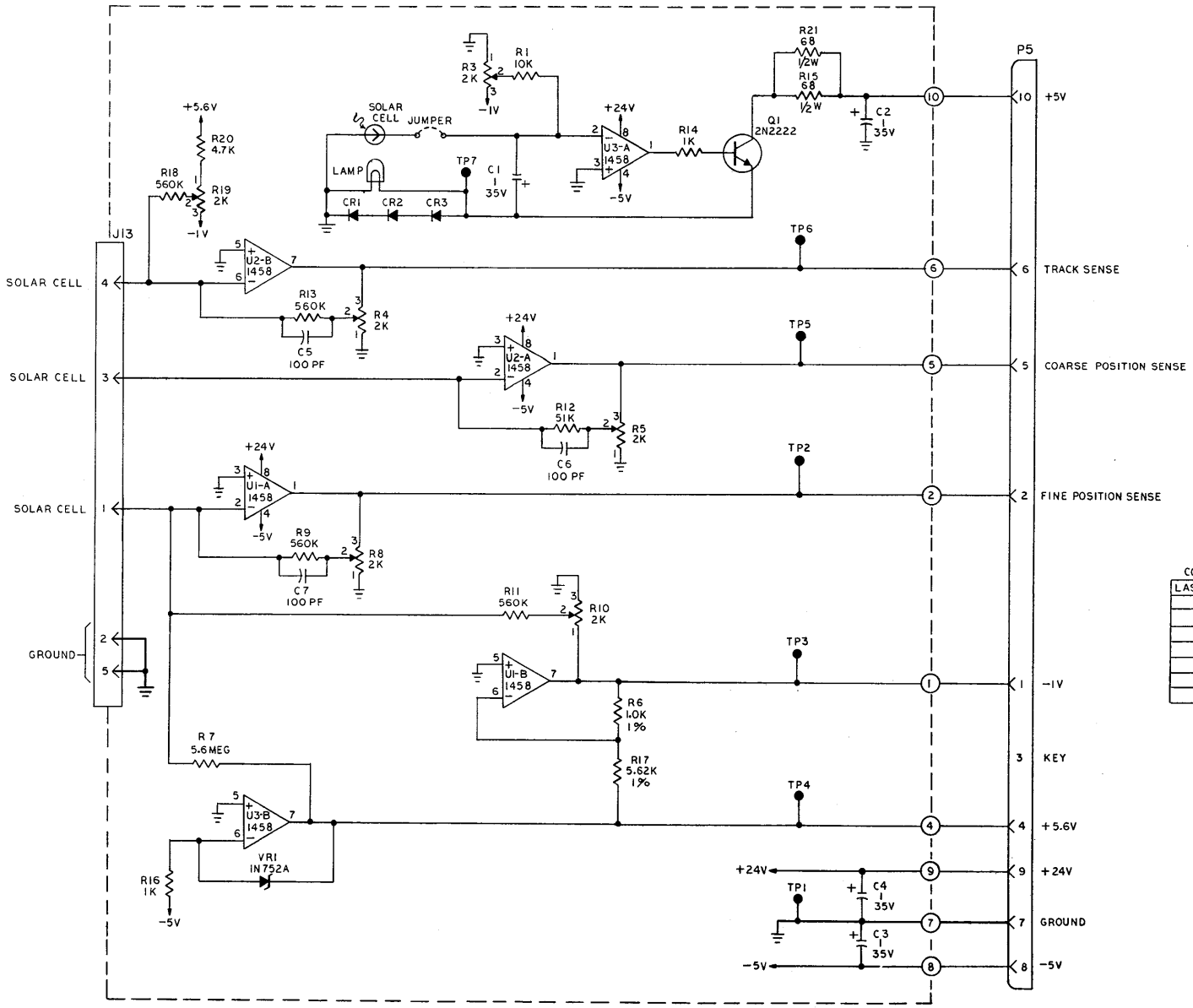

REVISIONS		200096	E
REV	DESCRIPTIONS	CHK	DATE	APP R
A	ENGIN REL		8/78	
B	ADD R18,19 & 20		9/78	
C	ECO 63 MFG REL		1/79	
D	SEE ECO 77		1/79	
E	ECO 179		4-3-79	

COMP REF. DESIGNATIONS

LAST USED	DELETED
U3	
Q1	
CR3	
C7	
R21	R2
TP7	
VR1	

3 ALL DIODES TO BE IN4003.
2 ALL CAPACITOR VALUES IN MICROFARADS.
1 ALL RESISTOR VALUES IN OHMS, 1/4W., 5%. UNLESS OTHERWISE SPECIFIED;

PERSCI, INC.

SCALE: | APPROVED BY: | DRAWN BY

DATE: | REVISED

SCHEMATIC, PCB, LAMP AMPLIFIER

MOD 270/272/277 SHT 1 OF 1 | DRAWING NUMBER 200096 E

200096 E

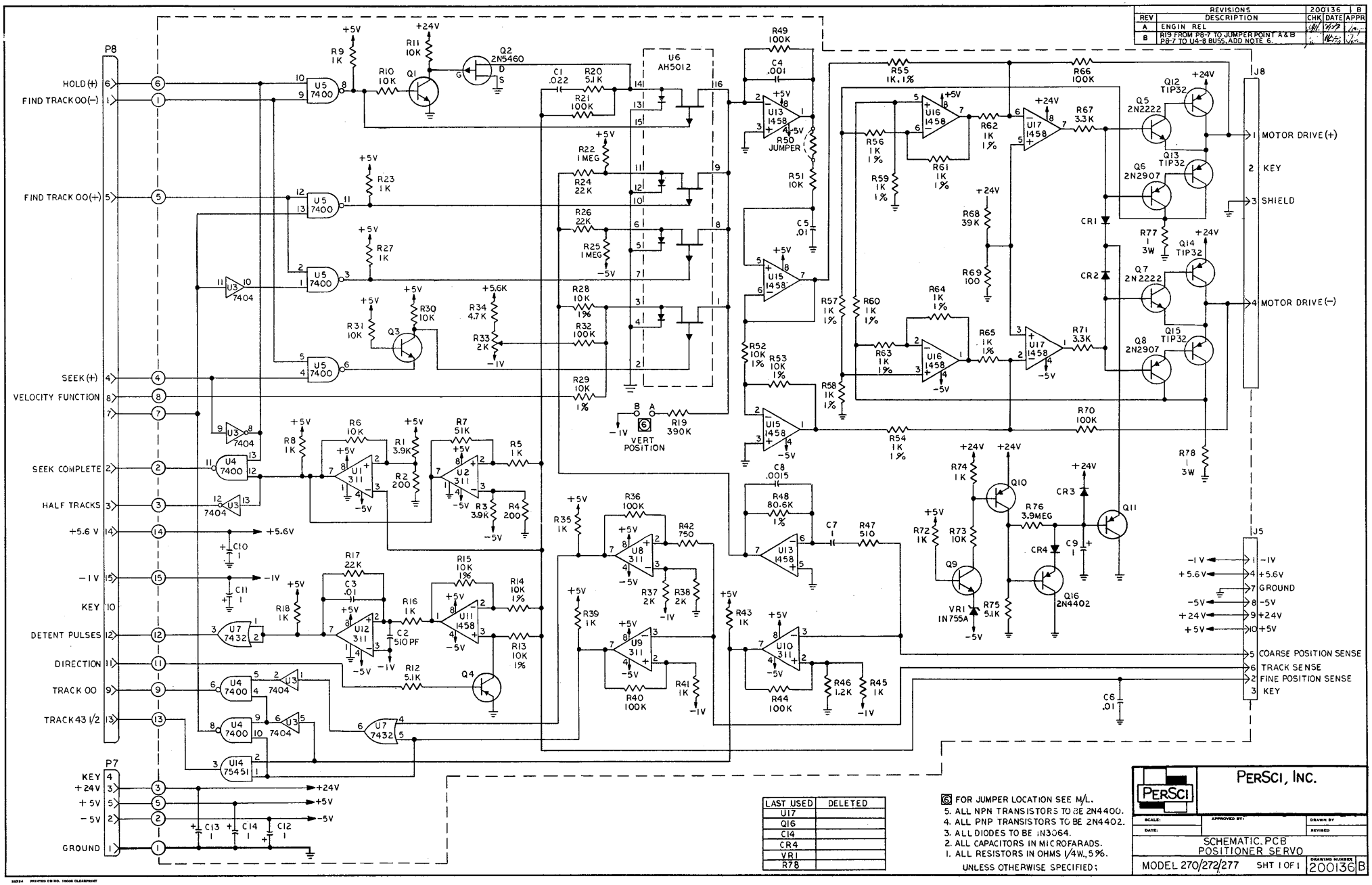
REVISIONS
REV DESCRIPTION CHK DATE APPR
A ENGIN REL
B R19 FROM P8-7 TO JUMPER POINT A & B P8-7 TO U4-8 BUSS, ADD NOTE 6.
200136 B
P8
HOLD (+)
FIND TRACK 00 (-)
FIND TRACK 00 (+)
SEEK (+)
VELOCITY FUNCTION
SEEK COMPLETE
HALF TRACKS
+5.6 V
-1 V
KEY
DETENT PULSES
DIRECTION
TRACK 00
TRACK 43 1/2
P7
KEY
+24V
+5V
-5V
GROUND
U5 7400
U3 7404
U4 7400
U7 7432
U14 75451
U1 311
U2 311
U8 311
U9 311
U10 311
U11 1458
U12 311
U13 1458
U15 1458
U16 1458
U17 1458
U6 AH5012
Q1
Q2 2N5460
Q3
Q4
Q5 2N2222
Q6 2N2907
Q7 2N2222
Q8 2N2907
Q9
Q10
Q11
Q12 TIP32
Q13 TIP32
Q14 TIP32
Q15 TIP32
Q16 2N4402
CR1
CR2
CR3
CR4
VR1 IN755A
R50 JUMPER
VERT POSITION
J8
1 MOTOR DRIVE (+)
2 KEY
3 SHIELD
4 MOTOR DRIVE (-)
J5
-1V
+5.6V
GROUND
-5V
+24V
+5V
COARSE POSITION SENSE
TRACK SENSE
FINE POSITION SENSE
KEY
LAST USED DELETED
U17
Q16
C14
CR4
VR1
R78
FOR JUMPER LOCATION SEE M/L.
5. ALL NPN TRANSISTORS TO BE 2N4400.
4. ALL PNP TRANSISTORS TO BE 2N4402.
3. ALL DIODES TO BE 1N3064.
2. ALL CAPACITORS IN MICROFARADS.
1. ALL RESISTORS IN OHMS 1/4W., 5%.
UNLESS OTHERWISE SPECIFIED:
PERSCI, INC.
SCALE:
APPROVED BY:
DRAWN BY
DATE:
REVISED
SCHEMATIC, PCB
POSITIONER SERVO
MODEL 270/272/277 SHT 1 OF 1
DRAWING NUMBER 200136 B

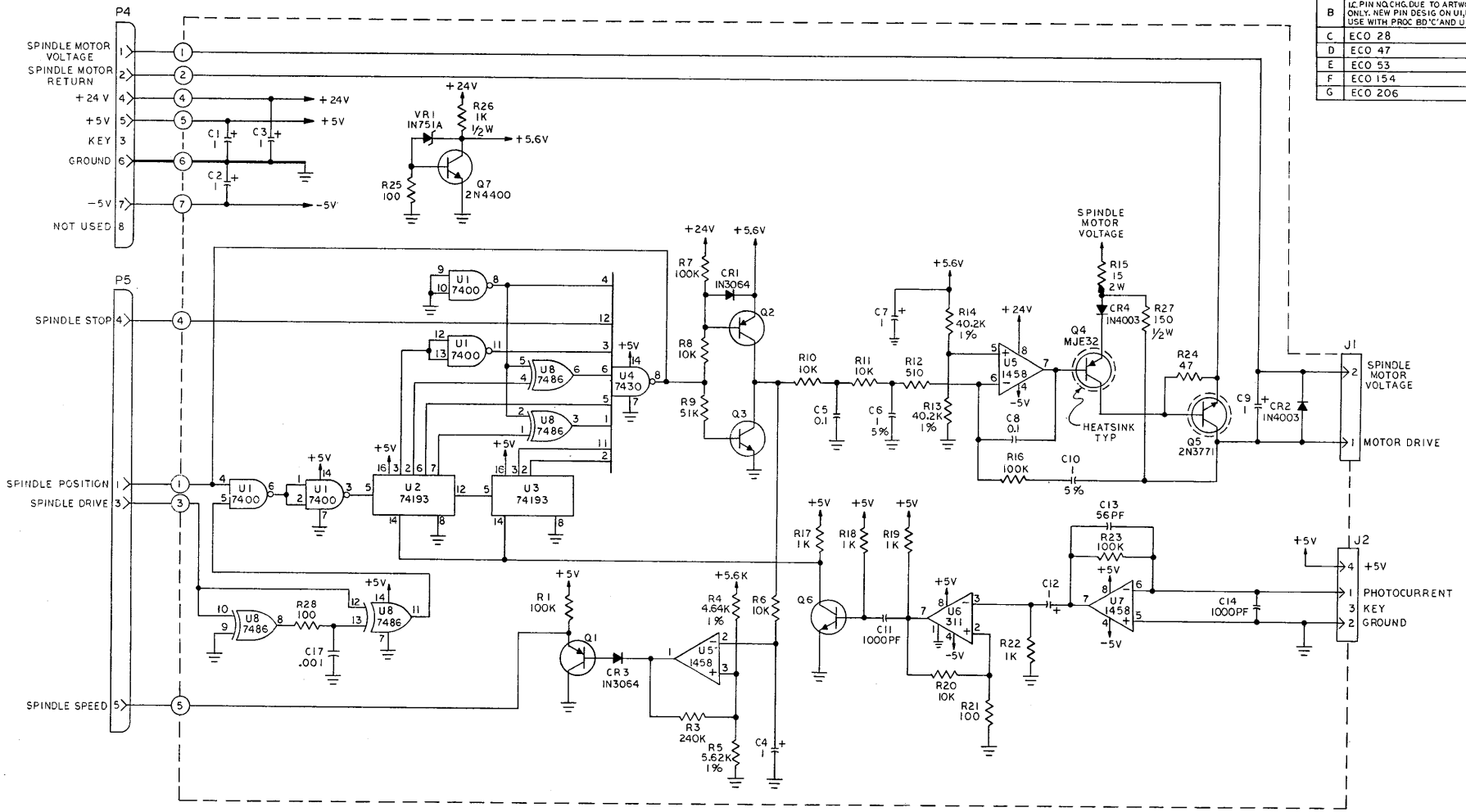

REVISIONS		200133	G
REV	DESCRIPTION	CHK	DATE	APPR
A	ENGIN REL			
B	I.C. PIN NO. CHG. DUE TO ARTWORK REDESIGN ONLY. NEW PIN DESIG ON U1,U4,U5 & U7. USE WITH PROC BD 'C' AND UP			
C	ECO 28			
D	ECO 47			
E	ECO 53			
F	ECO 154			
G	ECO 206			

REF DESIGNATIONS	
LAST USED	DELETED
U8	
Q7	
CR4	
C17	C15, C16
R28	R2
VR1	

4 ALL PNP TRANSISTORS TO BE 2N4402.
3 ALL NPN TRANSISTORS TO BE 2N4400.
2 ALL CAPACITOR VALUES IN MICROFARADS.
1. ALL RESISTOR VALUES IN OHMS, 1/4W., 5%.
UNLESS OTHERWISE SPECIFIED;

PERSCI, INC.

SCALE: | APPROVED BY: | DRAWN BY
DATE: | REVISED

SCHEMATIC, PCB, SPINDLE SERVO

MOD 270/272/277 | SHT 1 OF 1 | DRAWING NUMBER 200133 G

200133 G

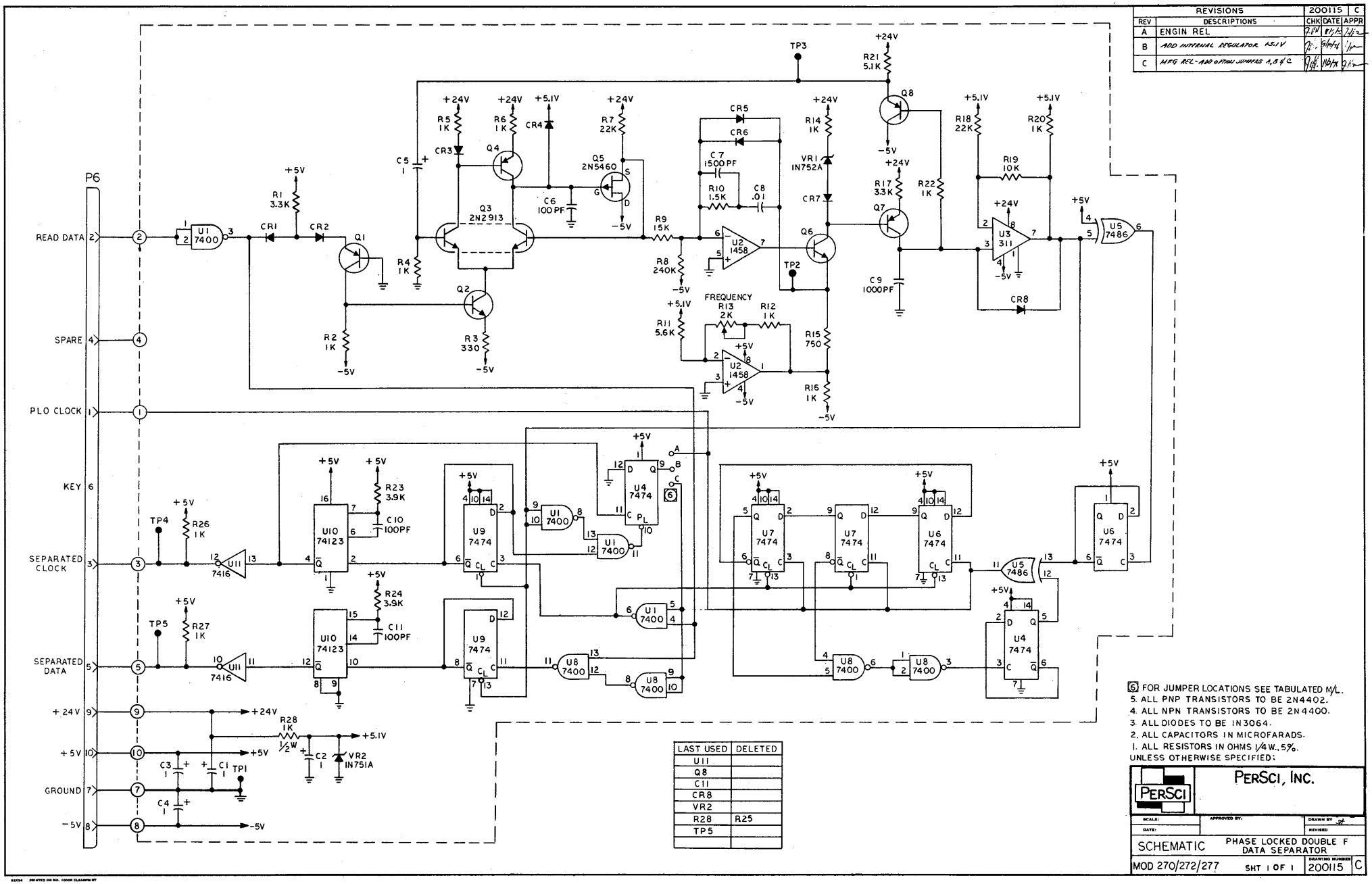

REVISIONS		200115	C
REV	DESCRIPTIONS	CHK	DATE	APPR
A	ENGIN REL			
B	ADD INTERNAL REGULATOR +5.1V			
C	MFG REL-ADD OPTION JUMPERS 1,3 & 6			

LAST USED	DELETED
U11	
Q8	
C11	
CR8	
VR2	
R28	R25
TP5	

6. FOR JUMPER LOCATIONS SEE TABULATED M/L.
5. ALL PNP TRANSISTORS TO BE 2N4402.
4. ALL NPN TRANSISTORS TO BE 2N4400.
3. ALL DIODES TO BE 1N3064.
2. ALL CAPACITORS IN MICROFARADS.
1. ALL RESISTORS IN OHMS 1/4W., 5%.
UNLESS OTHERWISE SPECIFIED:

PERSCI, INC.

SCALE: | APPROVED BY: | DRAWN BY
DATE: | REVISED

SCHEMATIC — PHASE LOCKED DOUBLE F DATA SEPARATOR

MOD 270/272/277 | SHT 1 OF 1 | DRAWING NUMBER 200115 | C

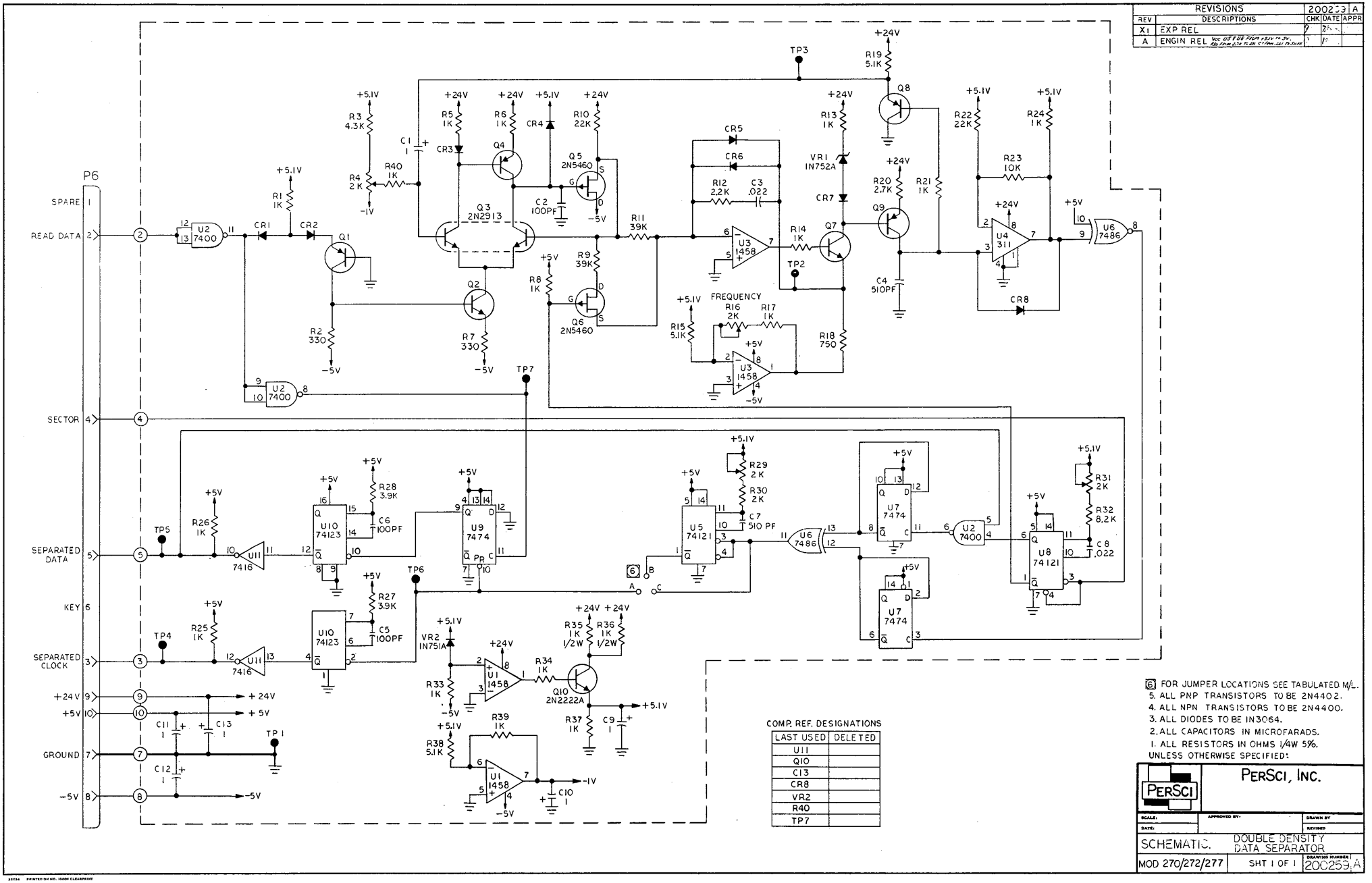

REVISIONS				200253 A
REV	DESCRIPTIONS	CHK	DATE	APPR
X1	EXP REL			
A	ENGIN REL			

[6] FOR JUMPER LOCATIONS SEE TABULATED M/L.
5. ALL PNP TRANSISTORS TO BE 2N4402.
4. ALL NPN TRANSISTORS TO BE 2N4400.
3. ALL DIODES TO BE IN3064.
2. ALL CAPACITORS IN MICROFARADS.
1. ALL RESISTORS IN OHMS 1/4W 5%.
UNLESS OTHERWISE SPECIFIED:

COMP. REF. DESIGNATIONS

LAST USED	DELETED
U11	
Q10	
C13	
CR8	
VR2	
R40	
TP7	

PERSCI, INC.

SCALE:	APPROVED BY:	DRAWN BY
DATE:		REVISED

SCHEMATIC. DOUBLE DENSITY DATA SEPARATOR

MOD 270/272/277 | SHT 1 OF 1 | DRAWING NUMBER 200253-A

PRINTED ON NO. 1000H CLEARPRINT

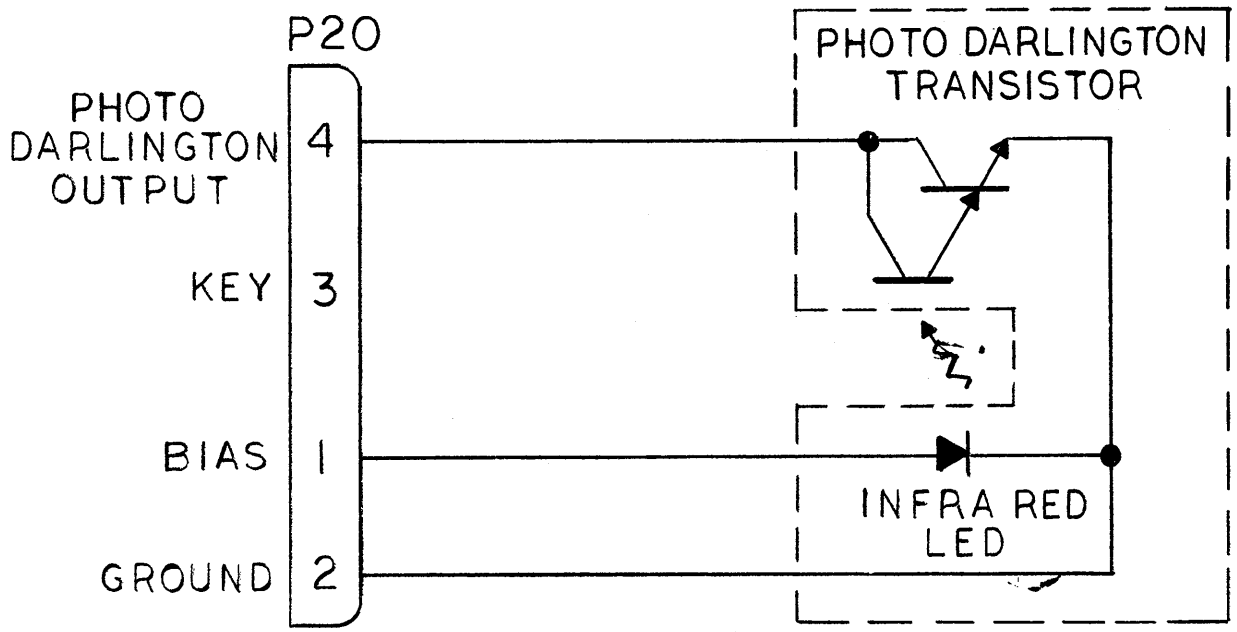

PERSCI, INC.

SCHEMATIC
WRITE PROTECT MODULE
SIDE 0

270/272/277	SHT 1 OF 1	200231	A

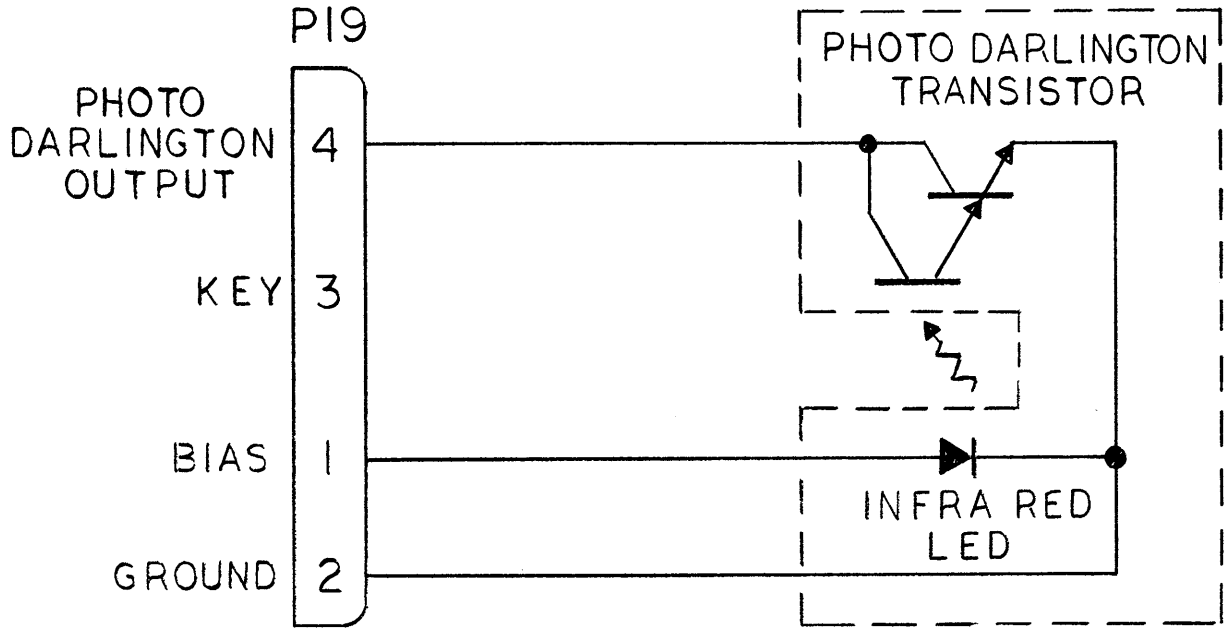

PERSCI, INC.

SCHEMATIC
WRITE PROTECT MODULE
SIDE 1

270/272/277	SHT 1 OF 1	200232	A

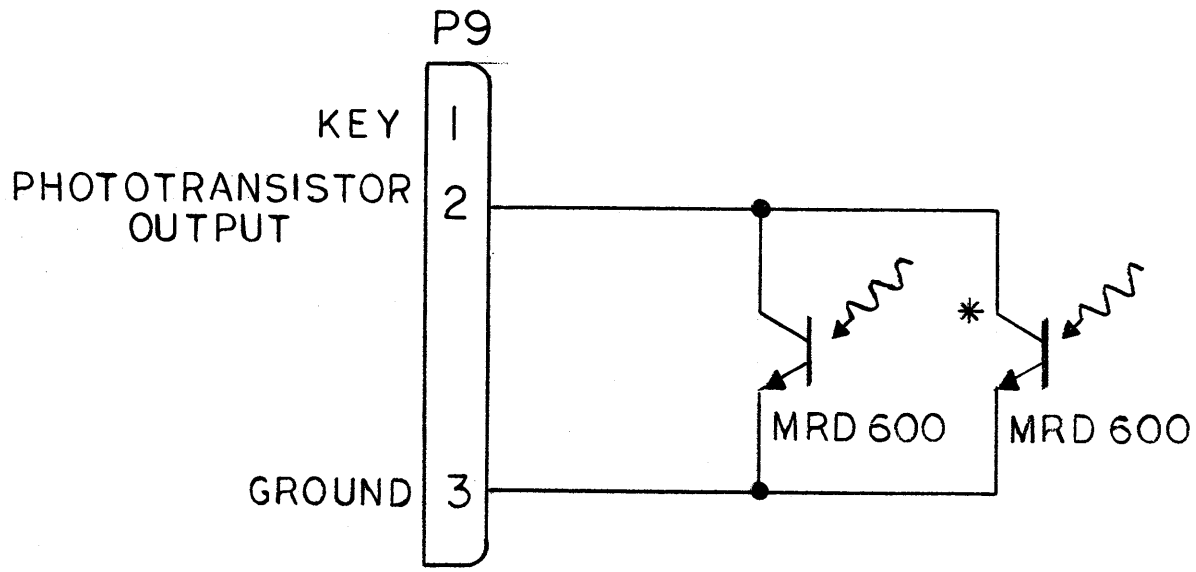

NOTE
SECOND PHOTOTRANSISTOR OPTIONAL FOR DUAL INDEX OPTION.

PERSCI, INC.

SCHEMATIC
PHOTOTRANSISTOR ASSEMBLY
SIDE 1

270/272/277	SHT 1 OF 1	200233	B

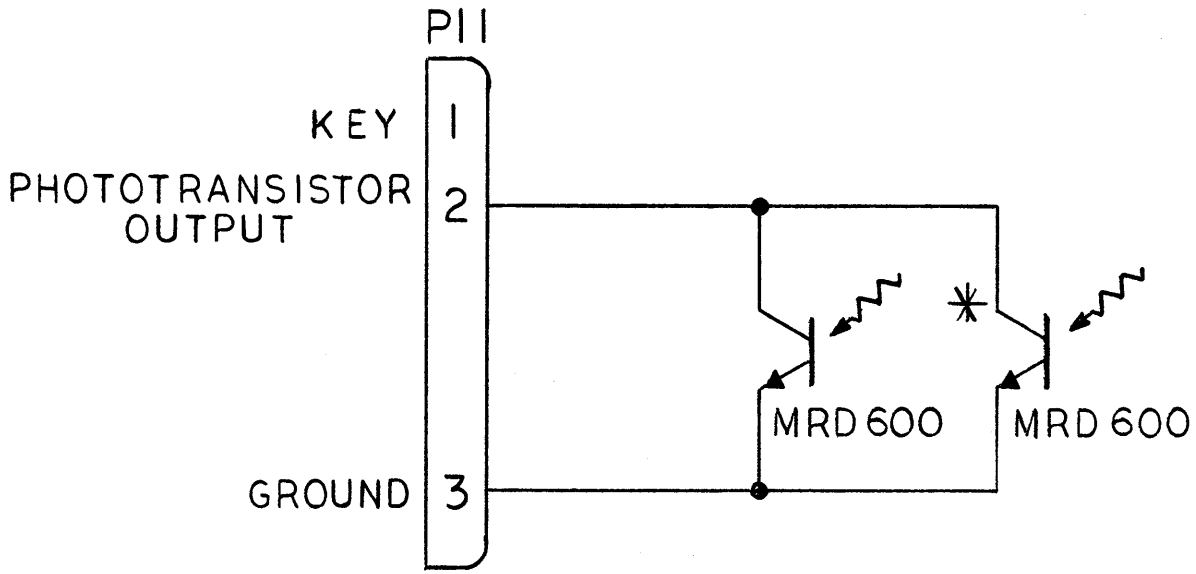

*NOTE
SECOND PHOTOTRANSISTOR OPTIONAL FOR DUAL INDEX OPTION.

PERSCI, INC.

SCHEMATIC
PHOTOTRANSISTOR ASSEMBLY
SIDE Ø

270/272/277	SHT 1 OF 1	200234	B

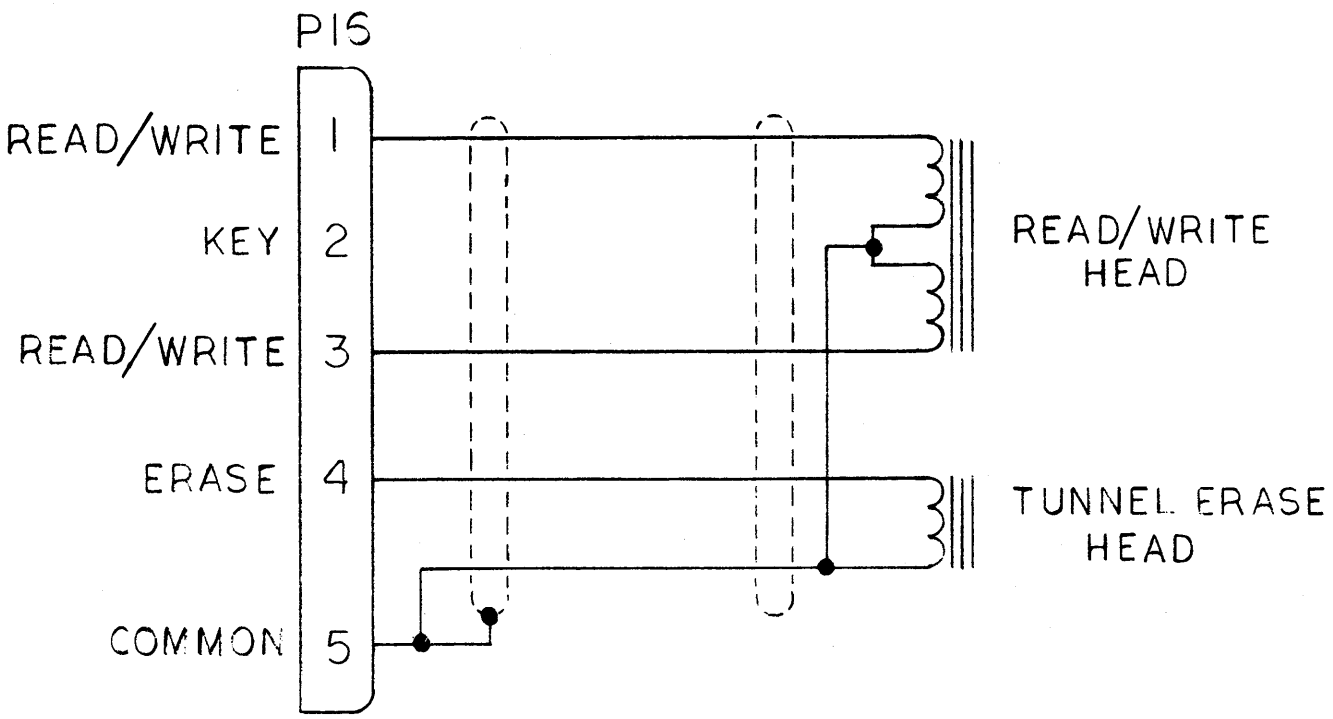

PERSCI, INC.

SCHEMATIC
READ/WRITE HEAD ASSEMBLY
SIDE 0

270/272/277	SHT 1 OF 1	200235	A

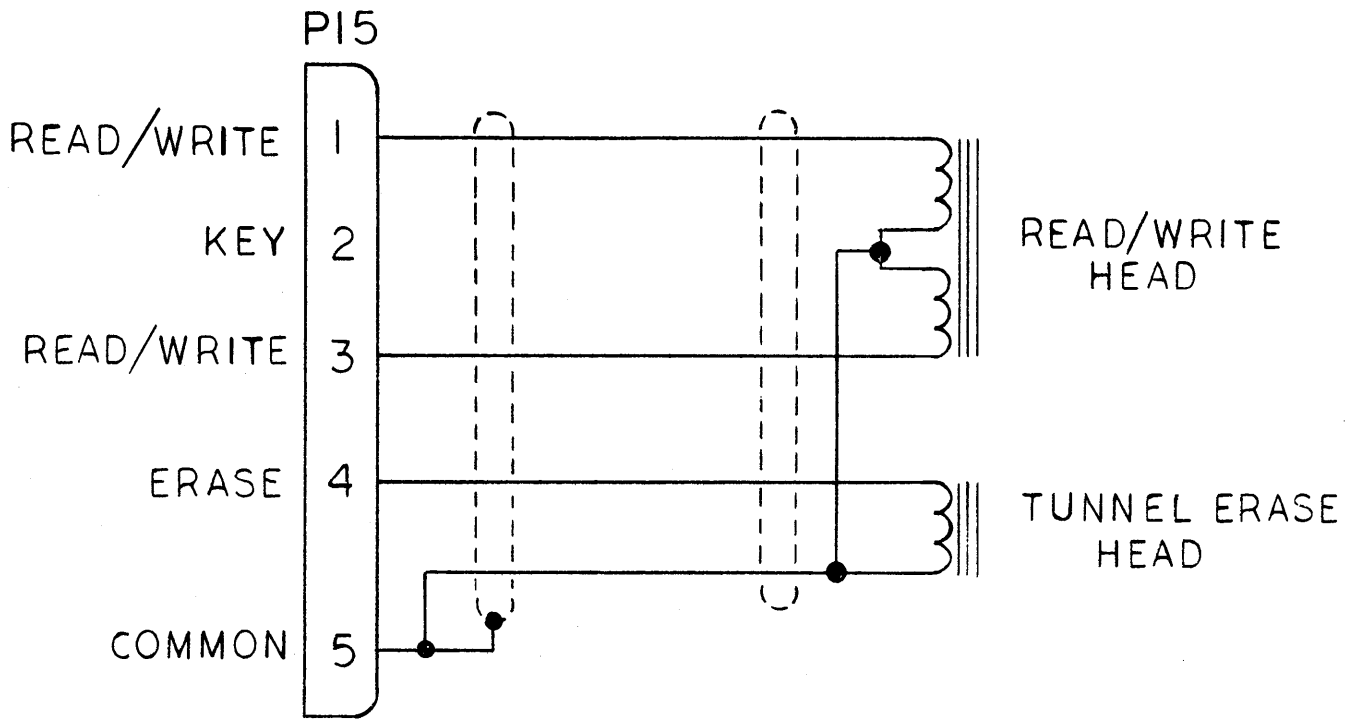

PERSCI, INC.

SCHEMATIC
READ/WRITE HEAD ASSEMBLY
SIDE 1

270/272/277	SHT 1 OF 1	200236	A

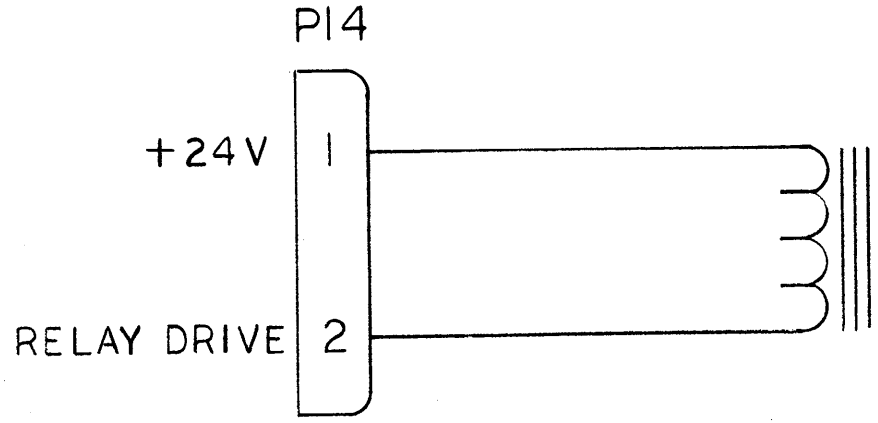

PERSCI, INC.

SCHEMATIC
HEAD LOAD ASSEMBLY
SIDE 0

270/272/277	SHT 1 OF 1	200237	A

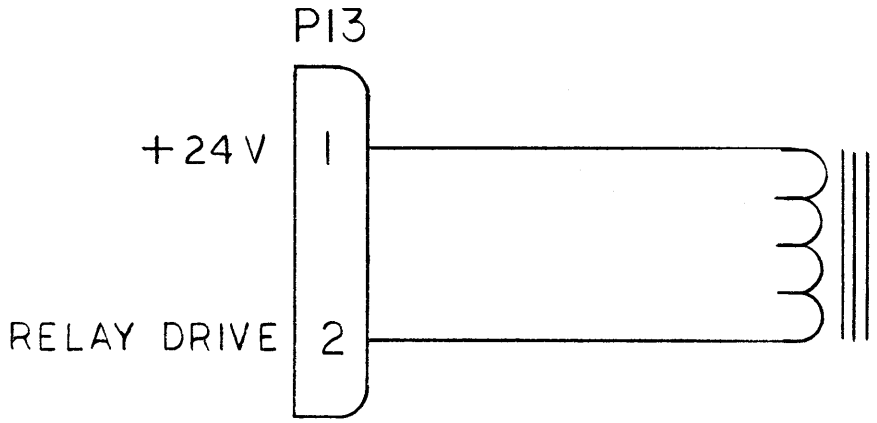

PERSCI, INC.

SCHEMATIC
HEAD LOAD ASSEMBLY
SIDE 1

270/272/277	SHT 1 OF 1	200238	A

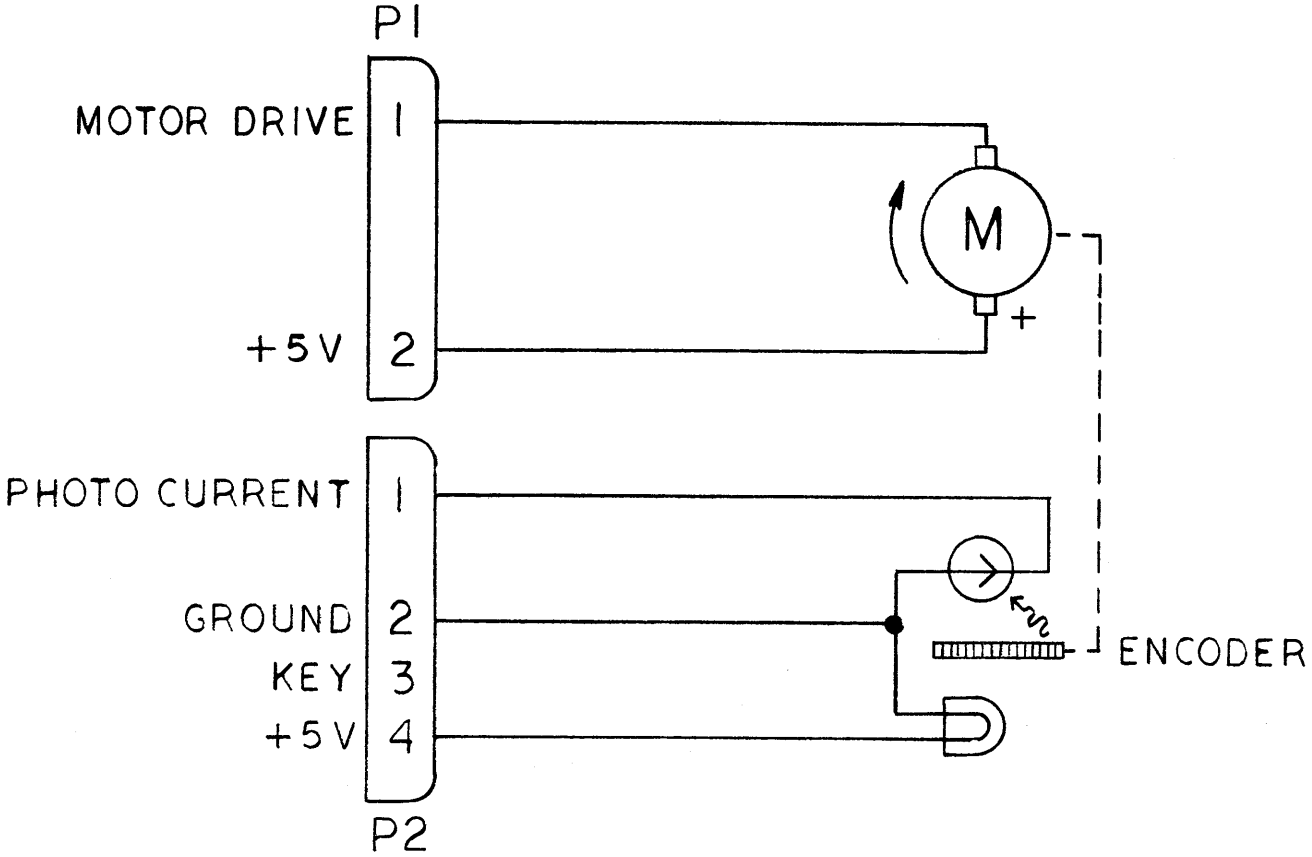

PERSCI, INC.

SCHEMATIC
SPINDLE MOTOR ASSEMBLY

270/272/277	SHT 1 OF 1	200239	A

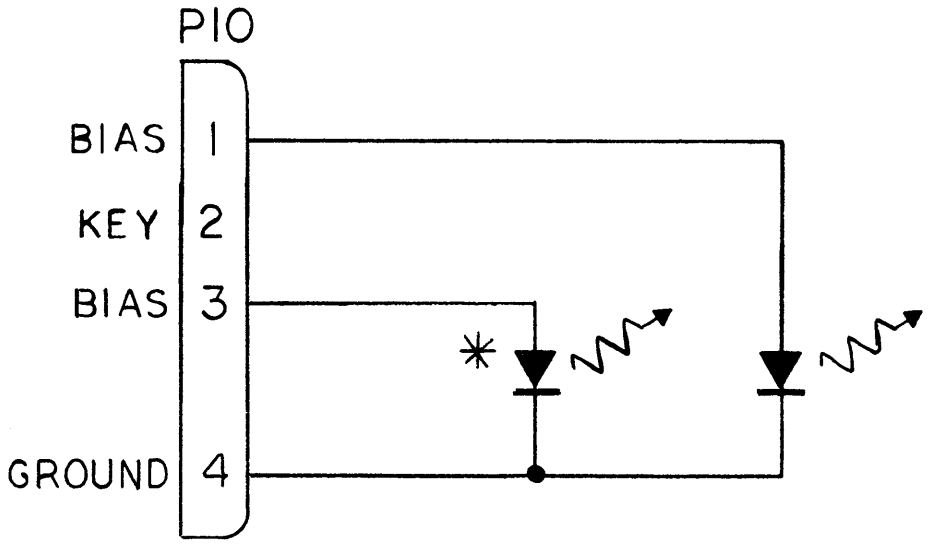

*NOTE;
SECOND LED OPTIONAL FOR
DUAL INDEX OPTION DRIVE.

PERSCI, INC.

SCHEMATIC
LED ASSEMBLY
SIDE 1

270/272/277	SHT 1 OF 1	200240	B

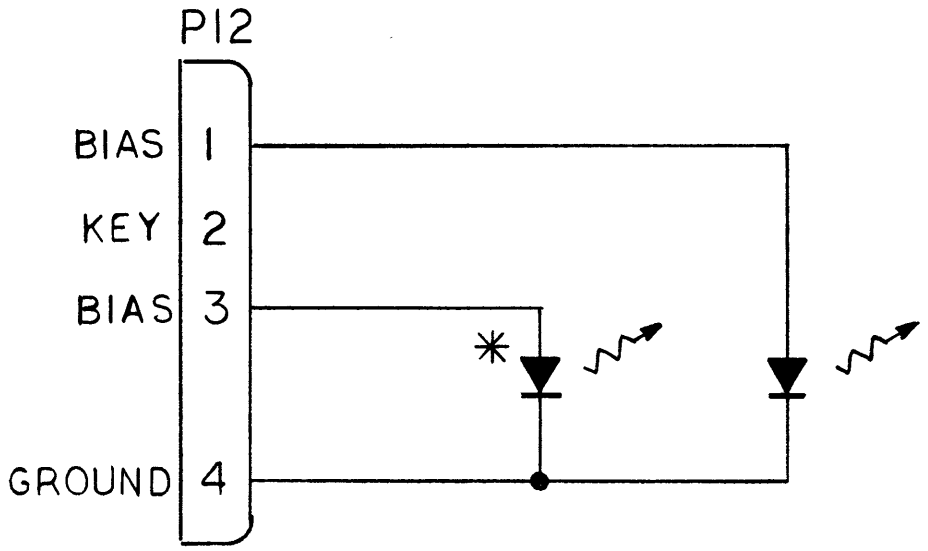

*NOTE
SECOND LED OPTIONAL FOR
DUAL INDEX OPTION DRIVE.

PERSCI, INC.

SCHEMATIC
LED ASSEMBLY
SIDE 0

270/272/277	SHT 1 OF 1	200241	B

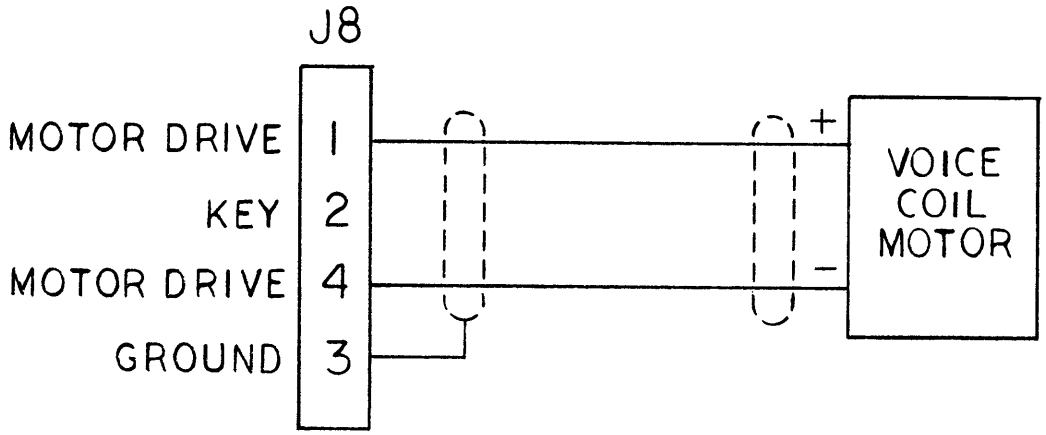

PERSCI, INC.

SCHEMATIC
POSITIONER MOTOR

270/272/277	SHT 1 OF 1	200242	A

REVISIONS			200243	B
REV.	DESCRIPTION	CHK.	DATE	APPROVED
A	MFG RELEASE			
B	ECO 109			

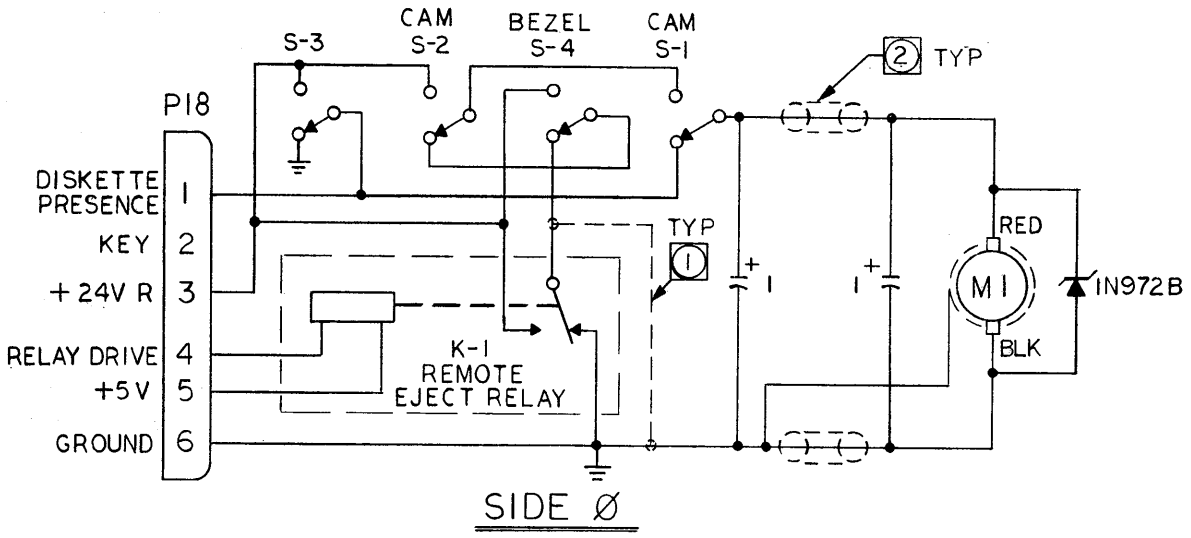

SIDE Ø

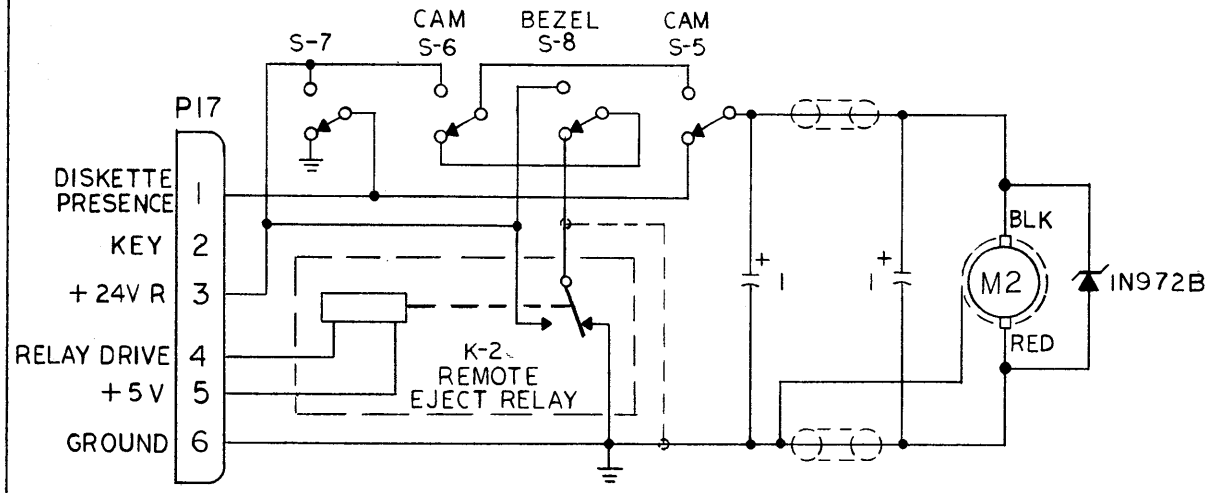

SIDE 1

3 ALL SWITCHES SHOWN NORMALLY CLOSED.

2 FERRITE BEAD PERSCI 100031.

1 OPTIONAL WIRING WITHOUT RELAY.

NOTES;

PERSCI, INC.

SCHEMATIC
EJECT MOTOR ASSEMBLY

270/272/277 SHT 1 OF 1 | 200243 | B

REV B

DWG NO. 200263-001

MATERIAL LIST

TITLE	DWG NO.	REV	SHEET
ASSEMBLY, PCB DATA AND INTERFACE	200263-001	B	SHEET 1 OF 1
MODEL 270/272 SINGLE DENSITY	PERSCI, INC.		

ITEM NO.	DRAWING TITLE	DWG NO.	QTY	REMARKS
	USE BASIC BD 200263-000			
	LATEST REVISION AND			
	ADD THE FOLLOWING:			
1				
2				
3	CAPACITOR, TANTL., 10% 0.1UF	150100-104	1	C36
4	CAPACITOR, TANTL., 10% 0.1UF	150100-104	2	C40,41
5				
6	RESISTOR ¼ W., 5% 36K	150000-363	2	R88,94
7				
8	WIRE, INSULATED AWG 24		A/R	JUMPER FROM A TO B
				JUMPER FROM D TO E
				JUMPER FROM F TO G
				JUMPER FROM H TO J
				JUMPER FROM M TO P
				JUMPER FROM R TO S
				JUMPER FROM W TO X
				JUMPER FROM AB TO AC
				JUMPER FROM AD TO AE
				JUMPER FROM AH TO AJ
				JUMPER FROM AL TO AM
				JUMPER FROM AY TO AT
				JUMPER FROM AV TO AW
				JUMPER FROM BA TO BB
				JUMPER FROM BD TO BE
				JUMPER FROM BK TO BM
				CHASSIS GND W1
	NOTE: JUMPER POINTS NOT LISTED			
	ARE OPEN (NOT USED)			

REV C

DWG NO. 200263-002

MATERIAL LIST

TITLE	DWG NO.	REV	SHEET
ASSEMBLY, PCB DATA AND INTERFACE	200263-002	C	SHEET 1 OF 1
MODEL 270 DOUBLE DENSITY	PERSCI, INC.		

ITEM NO.	DRAWING TITLE	DWG NO.	QTY	REMARKS
	USE BASIC BD 200263-000			
	LATEST REVISION AND			
	ADD THE FOLLOWING:			
1	IC 74193	150614	2	U16,27
2				
3	CAPACITOR, TANTL., 10% 0.1UF	150100-104	1	C36
4	CAPACITOR, TANTL., 10% 1UF	150100-105	2	C40,41
5				
6	RESISTOR, ¼ W., 5% 11K	150000-113	2	R88,94
7				
8	WIRE, INSULATED AWG 24		A/R	JUMPER FROM A TO B
				JUMPER FROM D TO E
				JUMPER FROM F TO G
				JUMPER FROM H TO J
				JUMPER FROM M TO P
				JUMPER FROM R TO S
				JUMPER FROM W TO Y
				JUMPER FROM AA TO AB
				JUMPER FROM AD TO AF
				JUMPER FROM AH TO AK
				JUMPER FROM AL TO AM
				JUMPER FROM AT TO AY
				JUMPER FROM AV TO AW
				JUMPER FROM BA TO BB
				JUMPER FROM BD TO BE
				JUMPER FROM BH TO BJ
				JUMPER FROM BK TO BM
				SECTOR "0" JUMPER 16
	NOTE: JUMPER POINTS NOT LISTED			SECTOR "1" JUMPER 16
	ARE OPEN (NOT USED)			CHASSIS GND W1

REV E

DWG NO. 200263-003

MATERIAL LIST

TITLE	DWG NO.	REV	SHEET
ASSEMBLY, PCB DATA AND INTERFACE	200263-003	E	SHEET 1 OF 1
MODEL 277 ROTARY SELECT	PERSCI, INC.		

ITEM NO.	DRAWING TITLE	DWG NO.	QTY	REMARKS
	USE BASIC BD 200263-000			
	LATEST REVISION AND			
	ADD THE FOLLOWING:			
1				
2				
3				
4	CAPACITOR, TANTL., 10% 0.1UF	150100-104	3	C40,41,36
5				
6	RESISTOR, ¼ W., 5% 36K	150000-363	2	R88,94
7	MODULE, SELECT	200288-005	1	U11
8	WIRE, INSULATED, AWG 24		A/R	JUMPER FROM A TO B
				JUMPER FROM J TO Z
				JUMPER FROM K TO L
				JUMPER FROM N TO P
				JUMPER FROM S TO T
				JUMPER FROM U TO V
				JUMPER FROM W TO X
				JUMPER FROM AB TO AC
				JUMPER FROM AD TO AE
				JUMPER FROM AH TO AJ
				JUMPER FROM AM TO AN
				JUMPER FROM AP TO AR
				JUMPER FROM AS TO AT
				JUMPER FROM AV TO AW
				JUMPER FROM BA TO BB
				JUMPER FROM BD TO BE
				JUMPER FROM BK TO BM
				CHASSIS GND W1
	NOTE: JUMPER POINTS NOT LISTED			
	ARE OPEN (NOT USED)			

REV C

DWG NO. 200263-005

MATERIAL LIST

TITLE	DWG NO.	REV	SHEET
ASSEMBLY, PCB DATA AND INTERFACE	200263-005	C	SHEET 1 OF 1
MODEL 270, 16 SECTORS	PERSCI, INC.		

ITEM NO.	DRAWING TITLE	DWG NO.	QTY	REMARKS
	USE BASIC BD 200263-000			
	LATEST REVISION AND			
	ADD THE FOLLOWING:			
1	IC 74193	150614	2	U16,27
2				
3	CAPACITOR, TANTL., 10% 0.1UF	150100-104	1	C36
4	CAPACITOR, TANTL., 10% 1UF	150100-105	2	C40,41
5				
6	RESISTOR, ¼W., 5% 11K	150000-113	2	R88,94
7				
8	WIRE, INSULATED, AWG 24		A/R	JUMPER FROM A TO B
				JUMPER FROM D TO E
				JUMPER FROM F TO G
				JUMPER FROM H TO J
				JUMPER FROM M TO P
				JUMPER FROM R TO S
				JUMPER FROM W TO Y
				JUMPER FROM AA TO AB
				JUMPER FROM AD TO AF
				JUMPER FROM AH TO AK
				JUMPER FROM AL TO AM
				JUMPER FROM AT TO AY
				JUMPER FROM AV TO AW
				JUMPER FROM BA TO BB
				JUMPER FROM BD TO BE
				JUMPER FROM BH TO BF
				JUMPER FROM BK TO BM
				SECTOR "0" JUMPER 16
				SECTOR "1" JUMPER 16
	NOTE: JUMPER POINTS NOT LISTED			CHASSIS GND W1
	ARE OPEN (NOT USED)			

REV D

DWG NO. 200263-007

MATERIAL LIST

TITLE	DWG NO.	REV	SHEET
ASSEMBLY, PCB DATA AND INTERFACE	200263-007	D	SHEET 1 OF 1
MODEL 270 HARD SECTOR 32 SECTORS	PERSCI, INC.		

ITEM NO.	DRAWING TITLE	DWG NO.	QTY	REMARKS
	USE BASIC BD 200263-000			
	LATEST REVISION AND ADD			
	THE FOLLOWING:			
1	ASSY, SELECT MODULE	200288-003	1	U11
2				
3	CAPACITOR, TANTL., 10% 0.1UF	150100-104	1	C36
4	CAPACITOR, TANTL., 10% 1UF	150100-105	2	C40,41
5				
6	RESISTOR, ¼ W., 5% 11K	150000-113	2	R88,94
7				
8	WIRE, INSULATED, AWG 24		A/R	JUMPER FROM A TO B
				JUMPER FROM D TO E
				JUMPER FROM F TO G
				JUMPER FROM H TO J
				JUMPER FROM M TO P
				JUMPER FROM R TO S
				JUMPER FROM W TO Y
				JUMPER FROM AA TO AB
				JUMPER FROM AD TO AF
				JUMPER FROM AH TO AK
				JUMPER FROM AL TO AM
				JUMPER FROM AT TO AY
				JUMPER FROM AU TO AW
				JUMPER FROM BA TO BB
				JUMPER FROM BD TO BE
				JUMPER FROM BH TO BJ
				JUMPER FROM BK TO BM
				SECTOR "0" JUMPER 32
	NOTE: JUMPER POINTS NOT LISTED			SECTOR "1" JUMPER 32
	ARE OPEN (NOT USED)			CHASSIS GND W1

REV B

DWG NO. 200263-008

MATERIAL LIST

TITLE	DWG NO.	REV	SHEET
ASSEMBLY, PCB DATA AND INTERFACE	200263-008	B	SHEET 1 OF 1

MODEL 270 SINGLE DENSITY, SELECTABLE DRIVE

PERSCI, INC.

ITEM NO.	DRAWING TITLE	DWG NO.	QTY	REMARKS
	USE BASIC BD 200263-000			
	LATEST REVISION AND			
	ADD THE FOLLOWING:			
1	ASSY., SELECT MODULE	200288-003	1	U11
2				
3	CAPACITOR, TANTL., 10% 0.1UF	150100-104	1	C36
4	CAPACITOR, TANTL., 10% 0.1UF	150100-104	2	C40,41
5				
6	RESISTOR, ¼ W., 5% 36K	150000-363	2	R88,94
7				
8	WIRE, INSULATED AWG 24		A/R	JUMPER FROM A TO B
				JUMPER FROM D TO E
				JUMPER FROM F TO G
				JUMPER FROM H TO J
				JUMPER FROM M TO P
				JUMPER FROM R TO S
				JUMPER FROM W TO X
				JUMPER FROM AB TO AC
				JUMPER FROM AD TO AE
				JUMPER FROM AH TO AJ
				JUMPER FROM AL TO AM
				JUMPER FROM AY TO AT
				JUMPER FROM AV TO AW
				JUMPER FROM BA TO BB
				JUMPER FROM BD TO BE
				JUMPER FROM BK TO BM
				CHASSIS GND W1
	NOTE: JUMPER POINTS NOT LISTED			
	ARE OPEN (NOT USED)			

REV C

DWG NO. 200263-001

MATERIAL LIST

TITLE	DWG NO.	REV	SHEET
ASSEMBLY, PCB DATA AND INTERFACE	200263-009	C	SHEET 1 OF 1
MODEL 270 SELECTABLE DRIVE, 16 SEPARATED SECTORS	PERSCI, INC.		

ITEM NO.	DRAWING TITLE		DWG NO.	QTY	REMARKS
	USE BASIC BD 200263-000				
	LATEST REVISION AND				
	ADD THE FOLLOWING:				
1	IC	74193	150614	2	U16,27
2	IC	75453	150618	1	U59 'DELETE'
3	CAPACITOR, TANTL., 10%	0.1UF	150100-104	1	C36
4	CAPACITOR, TANTL., 10%	1UF	150100-105	2	C40,41
5					
6	RESISTOR, ¼ W., 5%	11K	150000-113	2	R88,94
7	ASSY., SELECT MODULE		200288-003	1	U11
8	WIRE, INSULATED AWG 24			A/R	JUMPER FROM A TO B
					JUMPER FROM D TO E
					JUMPER FROM F TO G
					JUMPER FROM H TO J
					JUMPER FROM M TO P
					JUMPER FROM R TO S
					JUMPER FROM W TO Y
					JUMPER FROM AA TO AB
					JUMPER FROM AD TO AF
					JUMPER FROM AH TO AK
					JUMPER FROM AL TO AM
					JUMPER FROM AT TO AY
					JUMPER FROM AV TO AW
					JUMPER FROM BA TO BB
					JUMPER FROM BD TO BE
					JUMPER FROM BH TO BJ
					JUMPER FROM BK TO BM
					SECTOR "0" JUMPER 16
					SECTOR "1" JUMPER 16
	NOTE: JUMPER POINTS NOT LISTED				CHASSIS GND W1
	ARE OPEN (NOT USED)				

REV 5

DWG NO. 200263-010

MATERIAL LIST

TITLE	DWG NO.	REV	SHEET
ASSEMBLY, PCB DATA AND INTERFACE	200263-010	5	SHEET 1 OF 1
MODEL 277 HARD SECTOR 32 SECTOR ROTARY SELECT	PERSCI, INC.		

ITEM NO.	DRAWING TITLE	DWG NO.	QTY	REMARKS
	USE BASIC BD 200263-000			
	LATEST REVISION AND			
	ADD THE FOLLOWING:			
1				
2				
3	CAPACITOR, TANTL., 10% 0.1UF	150100-104	1	C36
4	CAPACITOR, TANTL., 10% 1.0UF	150100-105	2	C40,41
5				
6	RESISTOR, ¼ W., 5% 11K	150000-113	2	R88,94
7	MODULE, SELECT	200288-005	1	U11
8	WIRE, INSULATED, AWG 24		A/R	JUMPER FROM A TO B
				JUMPER FROM J TO Z
				JUMPER FROM K TO L
				JUMPER FROM N TO P
				JUMPER FROM S TO T
				JUMPER FROM W TO Y
				JUMPER FROM AA TO AB
				JUMPER FROM AD TO AF
				JUMPER FROM AH TO AK
				JUMPER FROM AM TO AN
				JUMPER FROM AP TO AR
				JUMPER FROM AS TO AT
				JUMPER FROM AV TO AW
				JUMPER FROM BC TO BB
				JUMPER FROM BD TO BE
				JUMPER FROM BL TO BM
				SECTOR "0" JUMPER 32
				SECTOR "1" JUMPER 32
	NOTE: JUMPER POINTS NOT LISTED			CHASSIS GND W1
	ARE OPEN (NOT USED)			

REV B

DWG NO. 200263-011

MATERIAL LIST

TITLE	DWG NO.	REV	SHEET
ASSEMBLY, PCB DATA AND INTERFACE	200263-011	C	SHEET 1 OF 1
MODEL 277 ROTARY SELECT MFM 32 SECTOR	PERSCI, INC.		

ITEM NO.	DRAWING TITLE	DWG NO.	QTY	REMARKS
	USE BASIC BD 200263-000			
	LATEST REVISION AND			
	ADD THE FOLLOWING:			
1				
2				
3	CAPACITOR, TANTL., 10% 0.1UF	150100-104	1	C36
4	CAPACITOR, TANTL., 10% 1.0UF	150100-105	2	C40,41
5				
6	RESISTOR, ¼ W., 5% 11K	150000-113	2	R88,94
7	MODULE, SELECT	200288-005	1	U11
8	WIRE, INSULATED, AWG 24		A/R	JUMPER FROM A TO B
				JUMPER FROM J TO Z
				JUMPER FROM K TO L
				JUMPER FROM N TO P
				JUMPER FROM S TO T
				JUMPER FROM W TO Y
				JUMPER FROM AA TO AB
				JUMPER FROM AD TO AF
				JUMPER FROM AH TO AK
				JUMPER FROM AM TO AN
				JUMPER FROM AP TO AR
				JUMPER FROM AS TO AT
				JUMPER FROM AV TO AW
				JUMPER FROM BC TO BB
				JUMPER FROM BD TO BE
				JUMPER FROM BH TO BJ
				JUMPER FROM BL TO BM
				SECTOR "0" JUMPER 32
				SECTOR "1" JUMPER 32
	NOTE: JUMPER POINTS NOT LISTED			CHASSIS GND W1
	ARE OPEN (NOT USED)			

REV C

DWG NO. 200263-012

MATERIAL LIST

TITLE	DWG NO.	REV	SHEET
ASSEMBLY, PCB DATA AND INTERFACE	200263-012	C	SHEET 1 OF 2
MODEL 270 DOUBLE DENSITY EXTERNAL PLO SYNC	PERSCI, INC.		

ITEM NO.	DRAWING TITLE	DWG NO.	QTY	REMARKS
	USE BASIC BD 200263-000 REV "H"			
	OR LATER REVISION AND ADD THE			
	FOLLOWING:			
1				
2				
3	CAPACITOR, TANTL., 10% 0.1 UF	150100-104	1	C36
4	CAPACITOR, TANTL., 10% 0.1 UF	150100-104	2	C40, 41
5				
6	RESISTOR, ¼ W., 5% 36K	150000-363	2	R88, 94
7	MODULE SELECT	200288-001	1	U11
8	WIRE, INSULATED AWG 24		A/R	JUMPER FROM A TO B
				JUMPER FROM D TO E
				JUMPER FROM F TO G
				JUMPER FROM H TO J
				JUMPER FROM M TO P
				JUMPER FROM R TO S
				JUMPER FROM W TO X
				JUMPER FROM AB TO AC
				JUMPER FROM AD TO AE
				JUMPER FROM AH TO AJ
				JUMPER FROM AL TO AM
				JUMPER FROM AY TO AT
				JUMPER FROM AV TO AW
				JUMPER FROM BA TO BB
				JUMPER FROM BD TO BE
				JUMPER FROM BK TO BM
				CHASSIS GND W1
			*	JUMP BH TO U11 PIN 10
	NOTE: JUMPER POINTS NOT LISTED			
	ARE OPEN (NOT USED)			
	*INSTALL ON BACK SIDE OF PCB			
	USING ITEM 129			

REV C

M/L NO. 200263-012

PERSCI INCORPORATED — MATERIAL LIST

TITLE	M/L NO.	REV
ASSY., PCB DATA & INTERFACE	200263-012	C

COMPILED BY: DATE	CHECKED BY: DATE	APPROVED BY: DATE	RELEASE/CHANGE DATE
R. MIYASATO 4/25/8			

NEXT ASSY.	1ST USED ON	DWG SIZE	SHEET 2 OF 2
200131-034	270 QANTEL	D	

ITEM NO.	DRAWING TITLE	DWG NO.	QTY	CODE	REMARKS
129	WIRE, WIRE WRAP	100106	AR		
130					
131	HOUSING, RECEP.	100179-002	1		J50
132	CONTACT, MALE	100177	2		
133					
134	WIRE, STRAND, PVC	100183-124	AR		BRN
135	WIRE, STRAND, PVC	100183-524	AR		GRN
136					
137	INSTRUCTION, MOD.	200633	R		

CODE: D = DETAIL PART WITH NO M/L; A = ASSEMBLY WITH M/L; R = REFERENCE DOCUMENT; S = SHIP SEPARATE

REV 4

DWG NO. 200263-013

MATERIAL LIST

TITLE	DWG NO.	REV	SHEET 1 OF 1
ASSEMBLY, PCB DATA AND INTERFACE	200263-013	/	

MODEL 270 SPECIAL INTERFACE

PERSCI, INC.

ITEM NO.	DRAWING TITLE	DWG NO.	QTY	REMARKS
	USE BASIC BD 200263-000			
	REVISION 'N' AND LATER			
	ADD THE FOLLOWING			
1				
2				
3	CAPACITOR, TANTL., 10% 0.1UF	150100-104	1	C36
4	CAPACITOR, TANTL., 10% 0.1UF	150100-104	2	C40,41
5				
6	RESISTOR ¼W., 5% 36K	150000-363	2	R88,94
7	MODULE, SELECT	200288-003	1	U11
8	WIRE, INSULATED AWG24		A/R	JUMPER FROM A TO B
				JUMPER FROM D TO E
				JUMPER FROM F TO G
				JUMPER FROM H TO J
				JUMPER FROM M TO P
				JUMPER FROM R TO S
				JUMPER FROM W TO X
				JUMPER FROM AA TO AB
				JUMPER FROM AD TO AE
				JUMPER FROM AK TO AH
				JUMPER FROM AM TO AN
				JUMPER FROM AY TO AT
				JUMPER FROM AV TO AW
				JUMPER FROM BA TO BB
				JUMPER FROM BD TO BE
				JUMPER FROM BK TO BM
				JUMPER FROM U TO V
				SECTOR O JUMPER I
	NOTE: JUMPER POINTS NOT LISTED			SECTOR I JUMPER I
	ARE OPEN (NOT USED)			CHASSIS GND W I

PERSCI, INC.

12210 Nebraska Ave
W Los Angeles
CA 90025

MAY , 1978