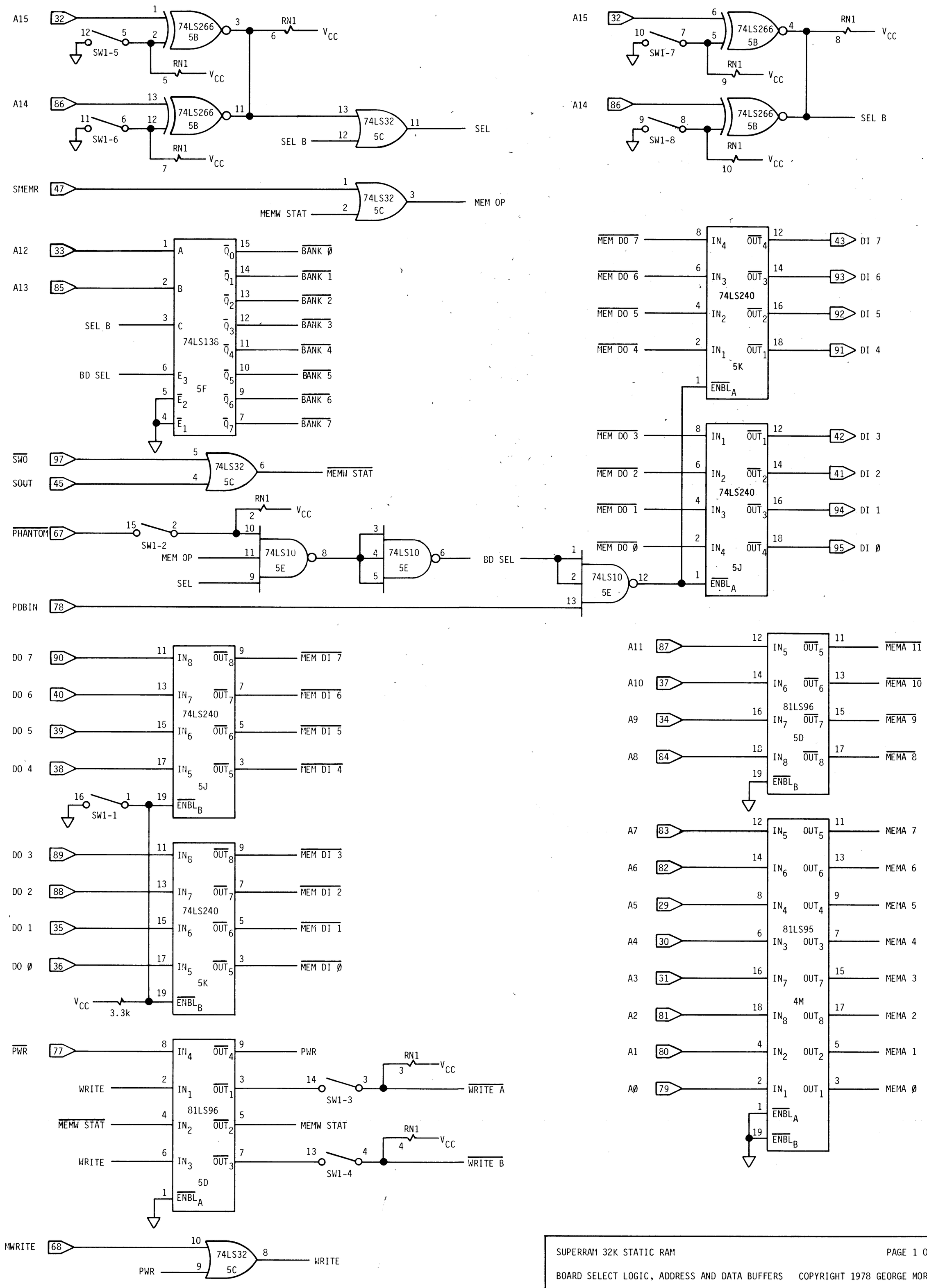

SUPERRAM 32K STATIC RAM — PAGE 1 OF 2

BOARD SELECT LOGIC, ADDRESS AND DATA BUFFERS — COPYRIGHT 1978 GEORGE MORROW

	BIT Ø	BIT 1	BIT 2	BIT 3		BIT 4	BIT 5	BIT 6	BIT 7	
BANK Ø	1C	2C	3C	4C	BLOCK A	6C	7C	8C	9C	BLOCK A
BANK 1	1D	2D	3D	4D		6D	7D	8D	9D	
BANK 2	1E	2E	3E	4E		6E	7E	8E	9E	
BANK 3	1F	2F	3F	4F		6F	7F	8F	9F	
BANK 4	1H	2H	3H	4H	BLOCK B	6H	7H	8H	9H	BLOCK B
BANK 5	1J	2J	3J	4J		6J	7J	8J	9J	
BANK 6	1K	2K	3K	4K		6K	7K	8K	9K	
BANK 7	1L	2L	3L	4L		6L	7L	8L	9L	

MEMORY ARRAY LAYOUT

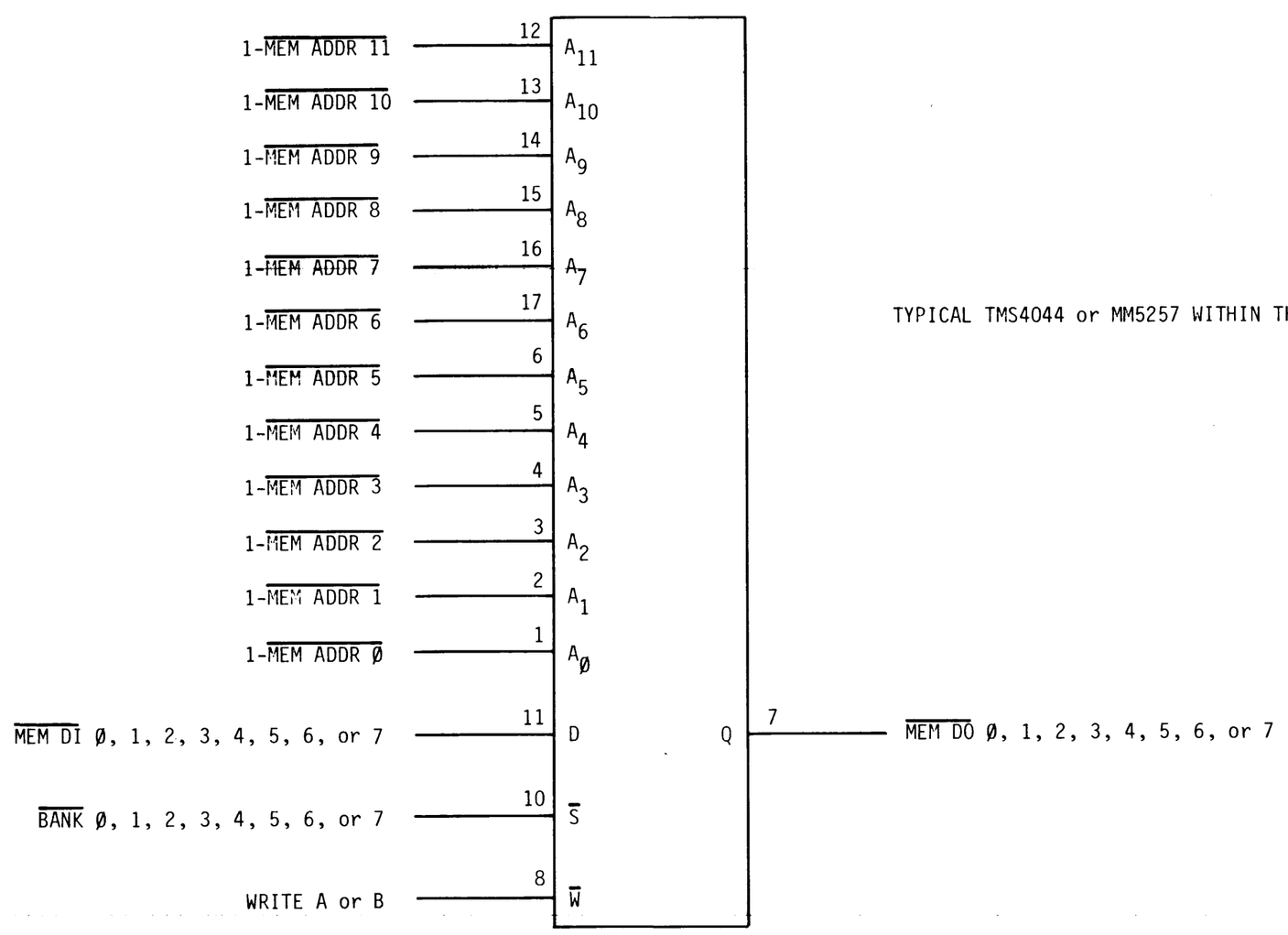

TYPICAL TMS4044 or MM5257 WITHIN THE MEMORY ARRAY

SUPERRAM 32K STATIC RAM

MEMORY ARRAY LAYOUT AND MEMORY CHIP PINOUT

COPYRIGHT 1978 GEORGE MORROW